LOT 111
DEL WEBB WILDLIGHT PHASE 1
OR 2547/1432

LOTTE VAJDA TRUST/LOTTE VAJDA TRUSTEE
408 DEL WEBB PKWY
YULEE, FL 32097

2024

50-3N-27-1004-0111-0000

BUILDING CHARACTERISTICS

ELEMENT	CD	CONSTRUCTION
Exterior Wall	31	HARDIE BRD 100
Roof Structur	03	GABLE/HIP 100
Roof Cover	03	COMP SHNGL 100
Interior Wall	05	DRYWALL 100
Interior Floo	13	LVT/LAMNT 100
Interior Floo	01	NONE 0
Air Condition	03	CENTRAL 100
Heating Type	04	AIR DUCTED 100
Bedrooms		2 100
Bathrooms		2 100
Frame	02	WOOD FRAME 100
Stories	1.	1. 100
Units		0 100
Quality	06	Quality Level 06
DOR CODE	0100	SINGLE FAMILY
MAP NUM		MKT AREA 04
NEIGHBORHOOD/LOC	4094.00	

AREA TYPE	TOTAL GROSS AREA	PCT OF BASE	TOT ADJ AREA	SUBAREA MARKET VALUE
BAS	1,960	100	1,960	303,722
FGR	570	55	314	48,657
FOP	24	30	7	1,085
FSP	192	40	77	11,932
TOTALS	2,746		2,358	365,396

MARKET ADJUSTMENTS

TYPE	MDL	EFF. AREA	TOT ADJ PTS	EFF. BASE RATE	REPL. COST NEW	AYB	EYB	ECON	FNCT		NORM	% COND
0900	01	2,358	123.9700	154.96	365,396	2023	2023	0	0	0	0.00	100.00

1 SNGL FAM – 100% - 2024 Heated Area: 1960 HX Base Yr 2024

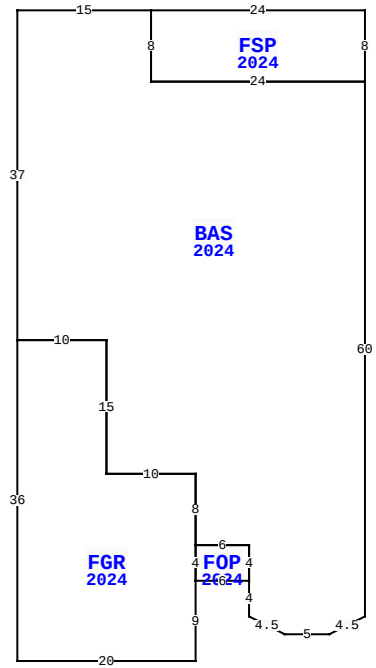

408 DEL WEBB PKWY, YULEE

BLD DATE		LGL DATE	
XF DATE		LAND DATE	06/12/2023 MLU
INC DATE		AG DATE	

NASSAU COUNTY PROPERTY

PAGE 1 of 1 4

VALUATION SUMMARY

VALUATION BY		STANDARD
Tax Group: 4	Tax Dist:	
BUILDING MARKET VALUE		365,396
TOTAL MARKET OB/XF VALUE		7,000
TOTAL LAND VALUE - MARKET		75,000
TOTAL MARKET VALUE		447,396
SOH/AGL Deduction		0
ASSESSED VALUE		447,396
TOTAL EXEMPTION VALUE	HX HB WX	55,000
BASE TAXABLE VALUE		392,396
TOTAL JUST VALUE		447,396
NCON VALUE		372,396
INCOME VALUE		
PREVIOUS YEAR MKT VALUE		75,000

PERMIT NUM	DESCRIPTION	AMT	ISSUED
230005096	CO		04/19/2023
22011789	NEW CONSTR	321,660	08/02/2022

SALES DATA

OFF RECORD Number	DATE	TYPE INST	Q U	V I	RSN CD	SALE PRICE
2633/738	4/20/2023	SW	Q	I	01	572,600

GRANTOR: PULTE HOME COMPANY LL

GRANTEE: LOTTE VAJDA TRUST

BUILDING NOTES

BUILDING DIMENSIONS

BAS=[YR=2024;ORIG=40,-26] W24 N8 W15 S37 E10 S15 E10 S8 E6 S4 S4 D2R4 E5 U2R4 N60 $
FSP=[YR=2024;ORIG=40,-34] W24 S8 E24 N8 $
FGR=[YR=2024;ORIG=1,3] S36 E20 N9 N4 N8 W10 N15 W10 $
FOP=[YR=2024;ORIG=27,26] W6 S4 E6 N4 $
.

EXTRA FEATURES

LN	OB/XF CODE	DESCRIPTION	BLD	CAP	L	W	UNITS	UT	Adj R	ADJ UNIT PRICE	ORIG COND	YEAR ON	YEAR ACTUAL	Q	% COND	OB/XF MKT VALUE	NOTES
1	0855	CONC PAVER	0	100	0	0	700.00	SF	10.00	10.00	100	2024	2023		100	7,000	

LAND DESCRIPTION

TOTAL OB/XF 7,000

LN	USE CODE	CLS	LAND USE DESCRIPTION	CAP	RD	LOC ZONE	FRONT	DEPTH	TOT LND UTS	UNIT TYPE	DT	DPTH FACT	% COND	TOT ADJ	UNIT PRICE	ADJ UNIT PRICE	LAND VALUE	OTHER ADJUSTMENTS AND NOTES	YEAR	DENSITY	DECL	FRZ	YR	CONSRV
1	000135	C	SFR CNSVTN	100		PD -	E 0.00	0.00	1.00	LT		1.00	1.00	1.00	75,000.00	75,000.00	75,000							

REVIEW DATE 08/11/2023 BY WW Total Acres: 0.00 Total Land Value: 75,000 Market: 0 Agricultural: 0 Common: 75,000 PRINTED 08/06/2024 BY SYS