LOT 11
IN OR 1310/71
ESMT OR 1462/1571

ROYER TAMARA S
49119 RIVER BLUFF RD
HILLIARD, FL 32046

2024

49-4N-25-4201-0011-0000

NASSAU COUNTY PROPERTY

BUILDING CHARACTERISTICS

ELEMENT	CD	CONSTRUCTION
Exterior Wall	10	ABOVE AVG 100
Roof Structur	03	GABLE/HIP 100
Roof Cover	03	COMP SHNGL 100
Interior Wall	05	DRYWALL 100
Interior Floo	12	HARDWOOD 60
Interior Floo	14	CARPET 40
Air Condition	03	CENTRAL 100
Heating Type	04	AIR DUCTED 100
Bedrooms		4 100
Bathrooms		3.5 100
Frame	02	WOOD FRAME 100
Stories	2.	2. 100
Units		0 100
Occupancy	00	NONE 100
Quality	04	Quality Level 04
DOR CODE	0100	SINGLE FAMILY
MAP NUM		MKT AREA 05
NEIGHBORHOOD/LOC	5002.00	

AREA TYPE	TOTAL GROSS AREA	PCT OF BASE	TOT ADJ AREA	SUBAREA MARKET VALUE
BAS	2,318	100	2,318	267,657
DCK	25	10	2	231
FGR	598	55	329	37,990
FOP	304	30	91	10,508
FOP	484	30	145	16,743
FUS	1,516	100	1,516	175,051
STR	40	10	4	462
UST	728	45	328	37,873
TOTALS	6,013		4,733	546,514

MARKET ADJUSTMENTS

TYPE	MDL	EFF. AREA	TOT ADJ PTS	EFF. BASE RATE	REPL. COST NEW	AYB	EYB	ECON	FNCT		NORM	% COND
0900	01	4,733	99.3300	124.16	587,649	2008	2008	0	0	0	7.00	93.00

1 SNGL FAM – 100% - 2013 Heated Area: 3834 HX Base Yr 2013

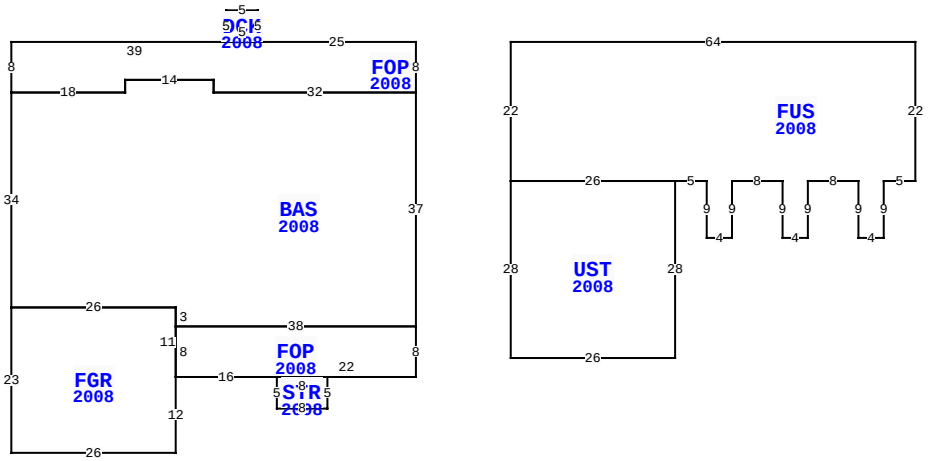

49119 RIVER BLUFF DR, HILLIARD

BLD DATE	12/12/2008 DJ	LGL DATE	
XF DATE		LAND DATE	
INC DATE		AG DATE	

NASSAU COUNTY PROPERTY — VALUATION SUMMARY

VALUATION BY		STANDARD
Tax Group: 4	Tax Dist:	
BUILDING MARKET VALUE		546,514
TOTAL MARKET OB/XF VALUE		6,387
TOTAL LAND VALUE - MARKET		66,150
TOTAL MARKET VALUE		619,051
SOH/AGL Deduction		347,816
ASSESSED VALUE		271,235
TOTAL EXEMPTION VALUE	HX HB WX	55,000
BASE TAXABLE VALUE		216,235
TOTAL JUST VALUE		619,051
NCON VALUE		0
INCOME VALUE		
PREVIOUS YEAR MKT VALUE		594,578

PERMIT NUM	DESCRIPTION	AMT	ISSUED
R10208	REPAIR/RRF	7,000	03/01/2007
C18766	CO ISSUED	345,506	11/01/2006
B18766	NEW CONSTR	345,506	11/01/2006
E18290	ELEC OTHER	5,000	11/01/2006
M12206	MECH OTHER	0	11/01/2006
P11678	OTHER	0	11/01/2006

SALES DATA

OFF RECORD Number	DATE	TYPE INST	Q U	V I	RSN CD	SALE PRICE
1310/0071	4/15/2005	WD	Q	V		83,400

GRANTOR: ALLISON LANDS INC
GRANTEE: ROYER STEVEN E & TA

BUILDING NOTES

BUILDING DIMENSIONS

FOP=[YR=2008] W25 DCK=[YR=2008] N5 W5 S5 E5$ W39 S8
BAS=[YR=2008] S34 FGR=[YR=2008] S23 E26 N12 FOP=[YR=2008]
E16 STR=[YR=2008] S5 E8 N5 W8$ E22 N8 W38 S8$ N11 W26$ E26
S3 E38 N37 W32 N2 W14 S2 W18$ E18 N2 E14 S2 E32 N8$ PTR=E15
FUS=[YR=2008] E64 S22 W5 S9 W4 N9 W8 S9 W4 N9 W8 S9 W4 N9 W5
UST=[YR=2008] S28 W26 N28 E26$ W26 N22$ W15$.

EXTRA FEATURES

LN	OB/XF CODE	DESCRIPTION	BLD	CAP	L	W	UNITS	UT	Adj R	ADJ UNIT PRICE	ORIG COND	YEAR ON	YEAR ACTUAL	Q	% COND	OB/XF MKT VALUE	NOTES
1	0504	FP-ELECTRI	0	100	0	0	1.00	UT	2,000.00	2,000.00	100	2008	2008	3	92	1,840	
2	0810	CONCRETE A	0	100	0	0	492.00	SF	6.50	6.50	100	2008	2008	3	89	2,846	
3	0810	CONCRETE A	0	100	0	0	294.00	SF	6.50	6.50	100	2008	2008	3	89	1,701	

LAND DESCRIPTION

TOTAL OB/XF 6,387

LN	USE CODE	CLS	LAND USE DESCRIPTION	CAP	RD	LOC ZONE	FRONT	DEPTH	TOT LND UTS	UNIT TYPE	DT	DPTH FACT	% COND	TOT ADJ	UNIT PRICE	ADJ UNIT PRICE	LAND VALUE	OTHER ADJUSTMENTS AND NOTES	YEAR	DENSITY	DECL	FRZ	YR	CONSRV
1	000100	C	SFR	100		OR	0.00	0.00	1.89	AC		1.00	1.00	1.00	35,000.00	35,000.00	66,150							

REVIEW DATE 11/22/2022 BY KBA Total Acres: 1.89 Total Land Value: 66,150 Market: 0 Agricultural: 0 Common: 66,150 PRINTED 08/06/2024 BY SYS