IN OR 2064/1930
PT OF LOT 2
SUB SEC 49 PB 2/15

GOFORTH JUNE J L/E/
P O BOX 188
CALLAHAN, FL 32011-0188

2024

49-2N-25-4100-0002-0020

NASSAU COUNTY PROPERTY

BUILDING CHARACTERISTICS

ELEMENT	CD	CONSTRUCTION
Exterior Wall	16	WD FR STUC 100
Roof Structur	03	GABLE/HIP 100
Roof Cover	12	MODULAR MT 100
Interior Wall	03	PLASTER 100
Interior Floo	14	CARPET 100
Air Condition	03	CENTRAL 100
Heating Type	04	AIR DUCTED 100
Bedrooms		3 100
Bathrooms		2 100
Frame	02	WOOD FRAME 100
Stories	1.	1. 100
Units		0 100
BUD8 Adjustme	01	DIST CA 100
Occupancy	00	NONE 100
Quality	03	Quality Level 03

DOR CODE 0100 SINGLE FAMILY
MAP NUM | MKT AREA 07
NEIGHBORHOOD/LOC 7001.00

AREA TYPE	TOTAL GROSS AREA	PCT OF BASE	TOT ADJ AREA	SUBAREA MARKET VALUE
BAS	1,580	100	1,580	117,968
BAS	432	100	432	32,255
FOP	24	30	7	522
FOP	35	30	10	746
UGR	576	45	259	19,338
TOTALS	2,647		2,288	170,829

MARKET ADJUSTMENTS

TYPE	MDL	EFF. AREA	TOT ADJ PTS	EFF. BASE RATE	REPL. COST NEW	AYB	EYB	ECON	FNCT		NORM	% COND
0100	01	2,288	108.7800	103.34	236,442	1949	1970	0	0	0	27.75	72.25

1 SINGLE FAM – 100% - 0 Heated Area: 2012 HX Base Yr

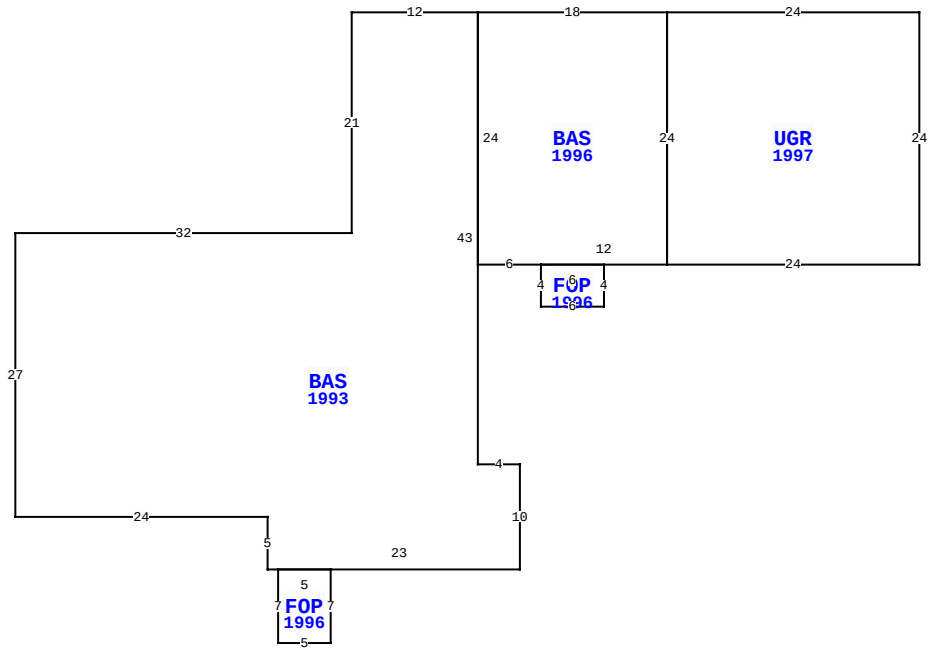

45446 FIFTH AVE, CALLAHAN

BLD DATE		LGL DATE	
XF DATE		LAND DATE	06/02/2023 MLU
INC DATE		AG DATE	

VALUATION SUMMARY

VALUATION BY		STANDARD
Tax Group: 1	Tax Dist:	
BUILDING MARKET VALUE		170,829
TOTAL MARKET OB/XF VALUE		8,604
TOTAL LAND VALUE - MARKET		105,000
TOTAL MARKET VALUE		284,433
SOH/AGL Deduction		184,704
ASSESSED VALUE		99,729
TOTAL EXEMPTION VALUE	HX HB WX	55,000
BASE TAXABLE VALUE		44,729
TOTAL JUST VALUE		284,433
NCON VALUE		0
INCOME VALUE		
PREVIOUS YEAR MKT VALUE		247,761

PERMIT NUM	DESCRIPTION	AMT	ISSUED
R4167	REPAIR/RRF	0	01/01/2018
2018	REPAIR/RRF	700	10/14/1996
2016	GARAGE	24,000	09/30/1996

SALES DATA

OFF RECORD Number	DATE	TYPE INST	Q U /	V I /	RSN CD	SALE PRICE
2064/1930	8/09/2016	QC	U	I	11	100
GRANTOR: GOFORTH JUNE J						
GRANTEE: HUTSON JULIE ET AL						
0122/0537	1/01/1973	TA	U	I		10,000
GRANTOR:						
GRANTEE:						

BUILDING NOTES

BUILDING DIMENSIONS

UGR=[YR=1997] W24 BAS=[YR=1996] W18 BAS=[YR=1993] W12 S21 W32 S27 E24 S5 E1 FOP=[YR=1996] S7 E5 N7 W5$ E23 N10 W4 N43$ S24 E6 FOP=[YR=1996] S4 E6 N4 W6$ E12 N24$ S24 E24 N24 $.

EXTRA FEATURES

LN	OB/XF CODE	DESCRIPTION	BLD	CAP	L	W	UNITS	UT	Adj R	ADJ UNIT PRICE	ORIG COND	YEAR ON	YEAR ACTUAL	Q	% COND	OB/XF MKT VALUE	NOTES
1	0940	SHEDS/PORT	0	100	9	16	144.00	SF	19.50	19.50	100	1996	1996	3	20	562	
2	0810	CONCRETE A	0	100	0	0	1,346.00	SF	6.50	6.50	100	1996	1996	3	72	6,299	
3	0500	FP-PRE FAB	0	100	0	0	1.00	UT	3,500.00	3,500.00	100	1980	1980	3	46.5	1,628	
4	1242	WD DECK A	0	100	0	0	48.00	SF	10.00	10.00	100	2005	2005	3	24	115	

LAND DESCRIPTION

TOTAL OB/XF 8,604

LN	USE CODE	CLS	LAND USE DESCRIPTION	CAP	RD	LOC ZONE	FRONT	DEPTH	TOT LND UTS	UNIT TYPE	DT	DPTH FACT	% COND	TOT ADJ	UNIT PRICE	ADJ UNIT PRICE	LAND VALUE	OTHER ADJUSTMENTS AND NOTES	YEAR	DENSITY	DECL	FRZ	YR	CONSRV
1	000000	C	VAC RES	100	0006	RL	150.00	122.00	150.00	FF		1.00	1.00	1.00	700.00	700.00	105,000							

REVIEW DATE 04/08/2024 BY TWA Total Acres: 0.00 Total Land Value: 105,000 Market: 0 Agricultural: 0 Common: 105,000 PRINTED 08/06/2024 BY SYS