PT ZACH HADDOCK GRANT
SEC 48-4N-25E IN OR 1822/756

CAST RAYMOND W JR & LAUREN J
394670 KOLARS FERRY RD
HILLIARD, FL 32046

2024

48-4N-25-0000-0001-0050

BUILDING CHARACTERISTICS

ELEMENT	CD	CONSTRUCTION
Exterior Wall	20	FACE BRICK 100
Roof Structur	03	GABLE/HIP 100
Roof Cover	03	COMP SHNGL 100
Interior Wall	05	DRYWALL 100
Interior Floo	14	CARPET 60
Interior Floo	12	HARDWOOD 40
Air Condition	03	CENTRAL 100
Heating Type	04	AIR DUCTED 100
Bedrooms		4 100
Bathrooms		3 100
Frame	02	WOOD FRAME 100
Stories	1.	1. 100
Units		0 100
BUD4 Adjustme	35	. 100
BUD8 Adjustme	04	DIST 01 100
Occupancy	00	NONE 100
Quality	01	Quality Level 01

DOR CODE	0100	SINGLE FAMILY	
MAP NUM		MKT AREA	05
NEIGHBORHOOD/LOC	5001.00		

AREA TYPE	TOTAL GROSS AREA	PCT OF BASE	TOT ADJ AREA	SUBAREA MARKET VALUE
BAS	3,722	100	3,722	445,422
FDG	729	60	437	52,297
FDG	480	60	288	34,466
FSP	180	40	72	8,616
FSP	748	40	299	35,782
FST	216	55	119	14,241
TOTALS	6,075		4,937	590,824

MARKET ADJUSTMENTS

TYPE	MDL	EFF. AREA	TOT ADJ PTS	EFF. BASE RATE	REPL. COST NEW	AYB	EYB	ECON	FNCT		NORM	% COND
0900	01	4,937	110.6820	138.35	683,034	2000	2005	0	0	0	13.50	86.50

1 SNGL FAM – 100% - 2013 Heated Area: 3722 HX Base Yr 2013

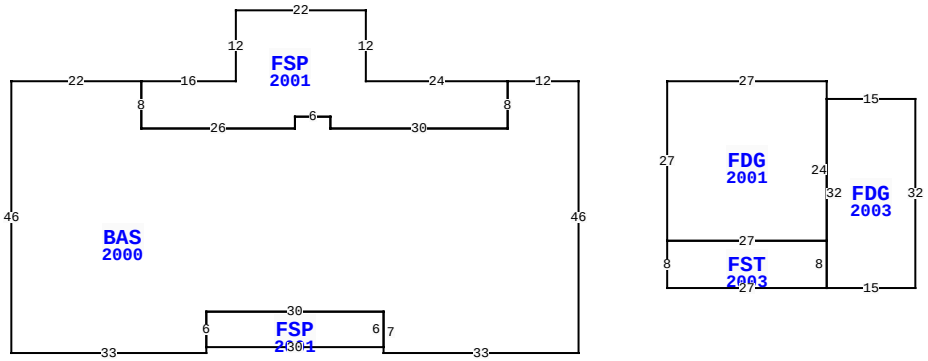

394670 KOLARS FERRY RD, HILLIARD

BLD DATE		LGL DATE	
XF DATE		LAND DATE	
INC DATE		AG DATE	

NASSAU COUNTY PROPERTY

PAGE 1 of 2 4

VALUATION SUMMARY

VALUATION BY		STANDARD
Tax Group: 4	Tax Dist:	
BUILDING MARKET VALUE		590,824
TOTAL MARKET OB/XF VALUE		91,075
TOTAL LAND VALUE - MARKET		134,640
TOTAL MARKET VALUE		816,539
SOH/AGL Deduction		374,734
ASSESSED VALUE		441,805
TOTAL EXEMPTION VALUE	HX HB VX DX	60,000
BASE TAXABLE VALUE		381,805
TOTAL JUST VALUE		816,539
NCON VALUE		0
INCOME VALUE		
PREVIOUS YEAR MKT VALUE		796,050

PERMIT NUM	DESCRIPTION	AMT	ISSUED
22010069	REPAIR/RRF	42,070	06/30/2022
22002461	ADDITION	19,161	02/14/2022
19006069	XFOB	14,619	07/01/2019
B1632899	XFOB	32,364	08/01/2016
B1632496	SWIM POOL	66,655	06/01/2016
B1327820	ADDITION	36,508	10/01/2013

SALES DATA

OFF RECORD Number	DATE	TYPE INST	Q U	V I	RSN CD	SALE PRICE
1822/0756	10/25/2012	WD	Q	I	02	428,000
GRANTOR: MELLROY LAWTON R JR						
GRANTEE: CAST RAYMOND W JR &						
1638/1481	8/14/2009	QC	U	I	30	100
GRANTOR: MELLROY LAWTON R JR &						
GRANTEE: MELLROY LAWTON R JR						

BUILDING NOTES

BUILDING DIMENSIONS

BAS=[YR=2000] W12 FSP=[YR=2001] W24 N12 W22 S12 W16 S8 E26 N2 E6 S2 E30 N8 $ S8 W30 N2 W6 S2 W26 N8 W22 S46 E33
N1FSP=[YR=2001] E30 N6 W30 S6 $ N6 E30 S7 E33 N46 $ PTR= E15
FDG=[YR=2001] E27 S3 FDG=[YR=2003] E15 S32 W15
FST=[YR=2003] W27 N8 E27 S8$ N32 $ S24 W27 N27 $ W15 $.

EXTRA FEATURES

LN	OB/XF CODE	DESCRIPTION	BLD	CAP	L	W	UNITS	UT	Adj R	ADJ UNIT PRICE	ORIG COND	YEAR ON	YEAR ACTUAL	Q	% COND	OB/XF MKT VALUE	NOTES
1	0810	CONCRETE A	0	100	0	0	213.00	SF	6.50	6.50	100	2002	2002	3	82	1,135	
2	0500	FP-PRE FAB	0	100	0	0	1.00	UT	3,500.00	3,500.00	100	2000	2000	3	84	2,940	
3	0300	BOAT DCK W	0	100	0	0	1,430.00	SF	40.00	40.00	100	2002	2002	3	30	17,160	
4	0351	CARPORT MT	0	100	30	20	600.00	SF	10.00	10.00	100	2005	2005	3	24	1,440	
5	0093	MANL GATE	0	100	0	0	1.00	UT	1,200.00	1,200.00	100	2005	2005	3	24	288	
6	0803	ASPHALT C	0	100	0	0	3,000.00	SF	2.00	2.00	100	2003	2003	3	52	3,120	
7	0350	CARPORT WD	0	100	14	17	238.00	SF	13.00	13.00	100	2005	2005	3	24	743	
8	0940	SHEDS/PORT	0	100	18	16	288.00	SF	20.10	20.10	100	2005	2005	3	24	1,389	
9	0350	CARPORT WD	0	100	7	14	98.00	SF	13.00	13.00	100	2005	2005	3	24	306	
10	0820	WOOD WALK	0	100	0	0	3,175.00	SF	11.75	11.75	100	2005	2005	3	40	14,923	

TOTAL OB/XF 43,444

LAND DESCRIPTION

LN	USE CODE	CLS	LAND USE DESCRIPTION	CAP	RD	LOC ZONE	FRONT	DEPTH	TOT LND UTS	UNIT TYPE	DT	DPTH FACT	% COND	TOT ADJ	UNIT PRICE	ADJ UNIT PRICE	LAND VALUE	OTHER ADJUSTMENTS AND NOTES	YEAR	DENSITY	DECL	FRZ	YR	CONSRV
1	000132	C	SFR RIVER	100	0005	OR	0.00	0.00	7.48	AC		1.00	1.00	1.00	18,000.00	18,000.00	134,640							

REVIEW DATE 06/15/2023 BY KWA Total Acres: 7.48 Total Land Value: 134,640 Market: 0 Agricultural: 0 Common: 134,640 PRINTED 08/06/2024 BY SYS

PT ZACH HADDOCK GRANT
SEC 48-4N-25E IN OR 1822/756

CAST RAYMOND W JR & LAUREN J
394670 KOLARS FERRY RD
HILLIARD, FL 32046

2024

48-4N-25-0000-0001-0050

NASSAU COUNTY PROPERTY

BUILDING CHARACTERISTICS

ELEMENT	CD	CONSTRUCTION

DOR CODE	0100	SINGLE FAMILY	
MAP NUM		MKT AREA	05
NEIGHBORHOOD/LOC	5001.00		

AREA TYPE	TOTAL GROSS AREA	PCT OF BASE	TOT ADJ AREA	SUBAREA MARKET VALUE
TOTALS				

MARKET ADJUSTMENTS

TYPE	MDL	EFF. AREA	TOT ADJ PTS	EFF. BASE RATE	REPL. COST NEW	AYB	EYB	ECON	FNCT		NORM	% COND

BLD DATE		LGL DATE	
XF DATE		LAND DATE	
INC DATE		AG DATE	

VALUATION SUMMARY

VALUATION BY		STANDARD
Tax Group: 4	Tax Dist:	
BUILDING MARKET VALUE		590,824
TOTAL MARKET OB/XF VALUE		91,075
TOTAL LAND VALUE - MARKET		134,640
TOTAL MARKET VALUE		816,539
SOH/AGL Deduction		374,734
ASSESSED VALUE		441,805
TOTAL EXEMPTION VALUE	HX HB VX DX	60,000
BASE TAXABLE VALUE		381,805
TOTAL JUST VALUE		816,539
NCON VALUE		0
INCOME VALUE		
PREVIOUS YEAR MKT VALUE		796,050

PERMIT NUM	DESCRIPTION	AMT	ISSUED
B1226604	XFOB	2,550	11/01/2012
B10256	GARAGE	0	10/01/2002
R4444	NEW CONSTR	0	10/01/2002
B007134	NEW CONSTR	167,000	05/01/2000

SALES DATA

OFF RECORD Number	DATE	TYPE INST	Q / U	V / I	RSN CD	SALE PRICE
1822/0756	10/25/2012	WD	Q	I	02	428,000
GRANTOR: MELLROY LAWTON R JR						
GRANTEE: CAST RAYMOND W JR &						
1638/1481	8/14/2009	QC	U	I	30	100
GRANTOR: MELLROY LAWTON R JR &						
GRANTEE: MELLROY LAWTON R JR						

BUILDING NOTES

BUILDING DIMENSIONS

EXTRA FEATURES

LN	OB/XF CODE	DESCRIPTION	BLD	CAP	L	W	UNITS	UT	Adj R	ADJ UNIT PRICE	ORIG COND	YEAR ON	YEAR ACTUAL	Q	% COND	OB/XF MKT VALUE	NOTES
11	0866	POOL FIBER	0	100	0	0	470.00	SF	72.00	72.00	100	2016	2016	3	74	25,042	
12	0911	SCRN RM A	0	100	0	0	1,260.00	SF	17.50	17.50	100	2016	2016	3	74	16,317	
13	0680	POLE SHED	1	100	40	16	640.00	SF	10.00	10.00	100	2023	2022		98	6,272	

LAND DESCRIPTION

TOTAL OB/XF 47,631

LN	USE CODE	CLS	LAND USE DESCRIPTION	CAP	RD	LOC ZONE	FRONT	DEPTH	TOT LND UTS	UNIT TYPE	DT	DPTH FACT	% COND	TOT ADJ	UNIT PRICE	ADJ UNIT PRICE	LAND VALUE	OTHER ADJUSTMENTS AND NOTES	YEAR	DENSITY	DECL	FRZ	YR	CONSRV

REVIEW DATE 06/15/2023 BY KWA Total Acres: 7.48 Total Land Value: 134,640 Market: 0 Agricultural: 0 Common: 134,640 PRINTED 08/06/2024 BY SYS