LOT 8
LITTLE PINEY ISLAND #2 PB5/261

LAWRENCE JEFFREY M & AMANDA K
98130 LITTLE PINEY ISLAND PT
FERNANDINA BEACH, FL 32034

2024

47-3N-28-5001-0008-0000

BUILDING CHARACTERISTICS

ELEMENT	CD	CONSTRUCTION
Exterior Wall	31	HARDIE BRD 100
Roof Structur	08	IRREGULAR 100
Roof Cover	03	COMP SHNGL 100
Interior Wall	05	DRYWALL 100
Interior Floo	12	HARDWOOD 50
Interior Floo	14	CARPET 50
Air Condition	03	CENTRAL 100
Heating Type	04	AIR DUCTED 100
Bedrooms		4 100
Bathrooms		3.5 100
Frame	02	WOOD FRAME 100
Stories	2.	2. 100
Units		0 100
Occupancy	00	NONE 100
Quality	03	Quality Level 03
DOR CODE	0100	SINGLE FAMILY
MAP NUM		MKT AREA 04
NEIGHBORHOOD/LOC	4016.00	

AREA TYPE	TOTAL GROSS AREA	PCT OF BASE	TOT ADJ AREA	SUBAREA MARKET VALUE
BAS	2,838	100	2,838	431,231
FGR	1,064	55	585	88,890
FOP	30	30	9	1,367
FOP	54	30	16	2,431
FOP	133	30	40	6,078
FOP	160	30	48	7,293
FOP	160	30	48	7,293
FOP	280	30	84	12,764
FOP	361	30	108	16,411
FST	469	55	258	39,203
TOTALS	8,257		5,735	871,427

MARKET ADJUSTMENTS

TYPE	MDL	EFF. AREA	TOT ADJ PTS	EFF. BASE RATE	REPL. COST NEW	AYB	EYB	ECON	FNCT		NORM	% COND
0500	01	5,735	104.9750	157.46	903,033	2015	2015	0	0	0	3.50	96.50

2 SFR CUST – 100% - 2002 Heated Area: 4293 HX Base Yr 2002

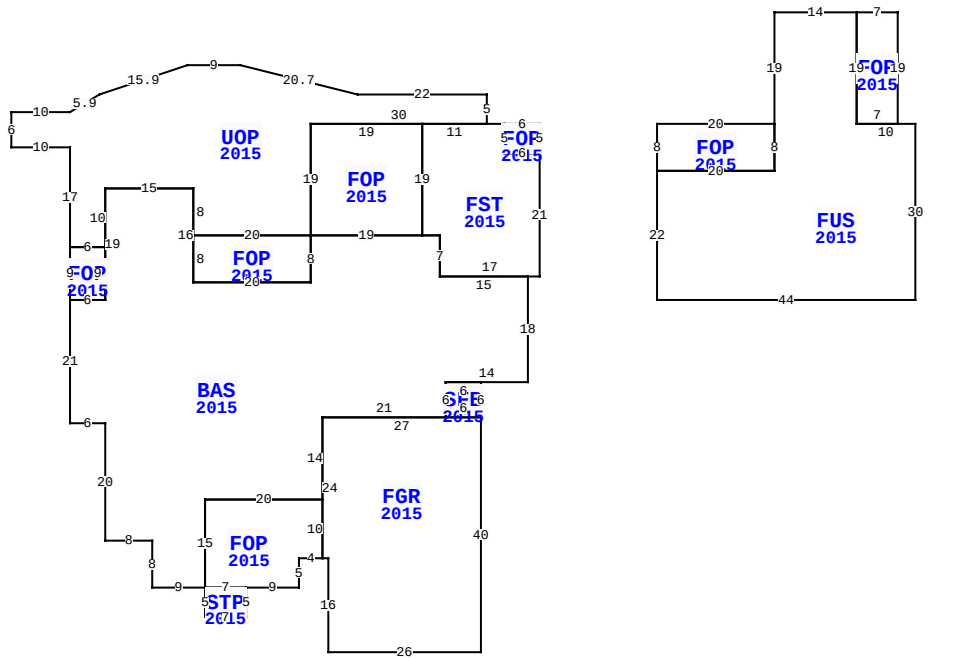

** This building has 14 Sub-Areas

98130 LITTLE PINEY ISLAND PT, FERNANDINA BEACH

BLD DATE	09/29/2008 RK	LGL DATE	
XF DATE		LAND DATE	05/24/2023 MLU
INC DATE		AG DATE	

NASSAU COUNTY PROPERTY

PAGE 1 of 2 7

VALUATION SUMMARY

VALUATION BY		STANDARD
Tax Group: 7	Tax Dist:	
BUILDING MARKET VALUE		871,427
TOTAL MARKET OB/XF VALUE		87,235
TOTAL LAND VALUE - MARKET		467,500
TOTAL MARKET VALUE		1,426,162
SOH/AGL Deduction		501,082
ASSESSED VALUE		925,080
TOTAL EXEMPTION VALUE	HX HB	50,000
BASE TAXABLE VALUE		875,080
TOTAL JUST VALUE		1,426,162
NCON VALUE		0
INCOME VALUE		
PREVIOUS YEAR MKT VALUE		1,183,062

PERMIT NUM	DESCRIPTION	AMT	ISSUED
B1327986	CO ISSUED	0	02/06/2015
B1428847	SWIM POOL	40,000	06/01/2014
B1327986	NEW CONSTR	319,405	11/01/2013
B1327982	DEMOLITION	1,000	11/01/2013
95-02034	NEW CONSTR	0	06/27/1995

SALES DATA

OFF RECORD Number	DATE	TYPE INST	Q / U	V / I	RSN CD	SALE PRICE
2445/1628	3/18/2021	QC	U	I	11	100
GRANTOR: LAWRENCE JEFFREY M &						
GRANTEE: LAWRENCE JEFFREY M						
1959/1406	1/21/2015	WD	U	I	11	100
GRANTOR: WELLINGTON DONNA C &						
GRANTEE: LAWRENCE JEFFREY M						

BUILDING NOTES

BUILDING DIMENSIONS

FOP=[YR=2015] W6 FST=[YR=2015] W3 UOP=[YR=2015] N5 W22 U5 L20 W9 L15 D5 L5 D3 W10 S6 E10 S17 FOP=[YR=2015] S9 BAS=[YR=2015] S21E6S20E8S8E9 STP=[YR=2015] S5 E7 N5 FOP=[YR=2015] E9 N5 E4 FGR=[YR=2015] E1 S16 E26 N40 SFB=[YR=2015] N6W6S6E6$ W27 S24$ N10 W20 S15 E7$ W7$ N15 E20 N14 E21 N6 E14 N18 W15 N7 W3 FOP=[YR=2015] N19 W19 S19 E19$ W19 FOP=[YR=2015] W20 S8 E20 N8$ S8 W20 N16 W15 S19 W6$ E6N9W6$ E6N10 E15S8E20N19E30$ W11S19E3S7E17 N21 W6N5$ S5E6N5$ PTR=E20 FOP=[YR=2015] E20 FUS=[YR=2015] N19 E14 FOP=[YR=2015] E7 S19 W7 N19$ S19 E10 S30 W44 N22 E20 N8$ S8 W20 N8$ W20$.

EXTRA FEATURES

L N	OB/XF CODE	DESCRIPTION	BLD	CAP	L	W	UNITS	UT	Adj R	ADJ UNIT PRICE	ORIG COND	YEAR ON	YEAR ACTUAL	Q	% COND	OB/XF MKT VALUE	NOTES
1	0300	BOAT DCK W	0	100	430	4	1,720.00	SF	40.00	40.00	100	2002	2002	3	30	20,640	
2	0300	BOAT DCK W	0	100	0	0	688.00	SF	40.00	40.00	100	2008	2008	3	52	14,310	
3	0303	FLT DOCK W	0	100	10	20	200.00	SF	26.00	26.00	100	2001	2001	3	29	1,508	
4	0310	AL GANG WY	0	100	0	0	20.00	LF	115.00	115.00	100	2017	2017	3	78	1,794	
5	0350	CARPORT WD	0	100	14	40	560.00	SF	13.00	13.00	100	2008	2008	3	35	2,548	
6	0500	FP-PRE FAB	0	100	0	0	2.00	UT	3,500.00	3,500.00	100	2015	2015	3	97	6,790	
7	0861	POOL GUNIT	0	100	0	0	324.00	SF	85.00	85.00	100	2015	2015	3	78	21,481	
8	0871	POOL HTR R	0	100	0	0	1.00	UT	2,000.00	2,000.00	100	2015	2015	3	70	1,400	
9	0812	CONCRETE C	0	100	0	0	2,736.00	SF	4.00	4.00	100	2015	2015	3	95	10,397	
10	0812	CONCRETE C	0	100	0	0	465.00	SF	4.00	4.00	100	2015	2015	3	95	1,767	

LAND DESCRIPTION

TOTAL OB/XF 82,635

L N	USE CODE	CLS	LAND USE DESCRIPTION	CAP	R D	LOC ZONE	FRONT	DEPTH	TOT LND UTS	UNIT TYPE	D T	DPTH FACT	% COND	TOT ADJ	UNIT PRICE	ADJ UNIT PRICE	LAND VALUE	OTHER ADJUSTMENTS AND NOTES	YEAR	DENSITY	DECL	FRZ	YR	CONSRV
1	000132	C	SFR RIVER	100		RSF-1	0.00	0.00	1.00	LT		1.00	1.00	1.10	425,000.00	467,500.00	467,500							

REVIEW DATE 02/29/2024 BY NWA Total Acres: 0.00 Total Land Value: 467,500 Market: 0 Agricultural: 0 Common: 467,500 PRINTED 08/06/2024 BY SYS

LOT 8
LITTLE PINEY ISLAND #2 PB5/261

LAWRENCE JEFFREY M & AMANDA K
98130 LITTLE PINEY ISLAND PT
FERNANDINA BEACH, FL 32034

2024

47-3N-28-5001-0008-0000

BUILDING CHARACTERISTICS

ELEMENT	CD	CONSTRUCTION

DOR CODE	0100	SINGLE FAMILY	
MAP NUM		MKT AREA	04
NEIGHBORHOOD/LOC	4016.00		

AREA TYPE	TOTAL GROSS AREA	PCT OF BASE	TOT ADJ AREA	SUBAREA MARKET VALUE
TOTALS				

MARKET ADJUSTMENTS

TYPE	MDL	EFF. AREA	TOT ADJ PTS	EFF. BASE RATE	REPL. COST NEW	AYB	EYB	ECON	FNCT		NORM	% COND

BLD DATE	09/29/2008	RK	LGL DATE
XF DATE			LAND DATE 05/24/2023 MLU
INC DATE			AG DATE

NASSAU COUNTY PROPERTY

PAGE 2 of 2 7

VALUATION SUMMARY

VALUATION BY		STANDARD
Tax Group: 7	Tax Dist:	
BUILDING MARKET VALUE		871,427
TOTAL MARKET OB/XF VALUE		87,235
TOTAL LAND VALUE - MARKET		467,500
TOTAL MARKET VALUE		1,426,162
SOH/AGL Deduction		501,082
ASSESSED VALUE		925,080
TOTAL EXEMPTION VALUE	HX HB	50,000
BASE TAXABLE VALUE		875,080
TOTAL JUST VALUE		1,426,162
NCON VALUE		0
INCOME VALUE		
PREVIOUS YEAR MKT VALUE		1,183,062

PERMIT NUM	DESCRIPTION	AMT	ISSUED

SALES DATA

OFF RECORD Number	DATE	TYPE INST	Q / U	V / I	RSN CD	SALE PRICE
2445/1628	3/18/2021	QC	U	I	11	100
GRANTOR: LAWRENCE JEFFREY M &						
GRANTEE: LAWRENCE JEFFREY M						
1959/1406	1/21/2015	WD	U	I	11	100
GRANTOR: WELLINGTON DONNA C &						
GRANTEE: LAWRENCE JEFFREY M						

BUILDING NOTES

BUILDING DIMENSIONS

EXTRA FEATURES

LN	OB/XF CODE	DESCRIPTION	BLD	CAP	L	W	UNITS	UT	Adj R	ADJ UNIT PRICE	ORIG COND	YEAR ON	YEAR ACTUAL	Q	% COND	OB/XF MKT VALUE	NOTES
11	0323	BOAT LFT H	0	100	0	0	1.00	UT	2,500.00	2,500.00	100	2018	2018	3	82	2,050	
12	0323	BOAT LFT H	0	100	0	0	1.00	UT	2,500.00	2,500.00	100	2015	2015	3	70	1,750	
13	0317	DCK PLNG W	0	100	0	0	4.00	UT	1,000.00	1,000.00	100	2001	2001	3	20	800	

LAND DESCRIPTION

TOTAL OB/XF 4,600

LN	USE CODE	CLS	LAND USE DESCRIPTION	CAP	RD	LOC ZONE	FRONT	DEPTH	TOT LND UTS	UNIT TYPE	DT	DPTH FACT	% COND	TOT ADJ	UNIT PRICE	ADJ UNIT PRICE	LAND VALUE	OTHER ADJUSTMENTS AND NOTES	YEAR	DENSITY	DECL	FRZ	YR	CONSRV

REVIEW DATE 02/29/2024 BY NWA Total Acres: 0.00 Total Land Value: 467,500 Market: 0 Agricultural: 0 Common: 467,500 PRINTED 08/06/2024 BY SYS