LOT 44
IN OR 1807/437
LITTLE PINEY ISLAND PB 5/81

BERT ARTHUR A & CATHERINE L
96284 PINEY ISLAND DRIVE
FERNANDINA BEACH, FL 32034

2024

47-3N-28-5000-0044-0000

NASSAU COUNTY PROPERTY

BUILDING CHARACTERISTICS

ELEMENT	CD	CONSTRUCTION
Exterior Wall	11	BD/BTN AVG 100
Roof Structur	08	IRREGULAR 100
Roof Cover	03	COMP SHNGL 100
Interior Wall	05	DRYWALL 100
Interior Floo	11	CLAY TILE 50
Interior Floo	12	HARDWOOD 50
Air Condition	03	CENTRAL 100
Heating Type	04	AIR DUCTED 100
Bedrooms		3 100
Bathrooms		2 100
Frame	02	WOOD FRAME 100
Stories	2.	2. 100
Units		0 100
BUD8 Adjustme	04	DIST 01 100
Quality	04	Quality Level 04

DOR CODE 0100 SINGLE FAMILY
MAP NUM | MKT AREA 04
NEIGHBORHOOD/LOC 4016.00

AREA TYPE	TOTAL GROSS AREA	PCT OF BASE	TOT ADJ AREA	SUBAREA MARKET VALUE
BAS	1,215	100	1,215	205,384
FGR	529	55	291	49,191
FOP	264	30	79	13,354
FOP	296	30	89	15,045
FUS	1,072	100	1,072	181,211
STR	15	10	2	338
UOP	50	20	10	1,690
TOTALS	3,441		2,758	466,215

MARKET ADJUSTMENTS

TYPE	MDL	EFF. AREA	TOT ADJ PTS	EFF. BASE RATE	REPL. COST NEW	AYB	EYB	ECON	FNCT		NORM	% COND
0900	11	2,758	146.9952	183.74	506,755	1987	2007	0	0	0	8.00	92.00

1 SNGL FAM – 100% - 2014 Heated Area: 2287 HX Base Yr 2014

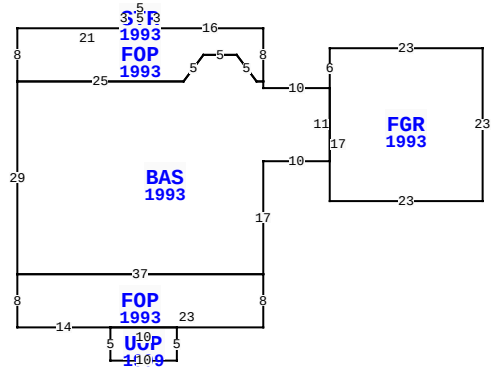

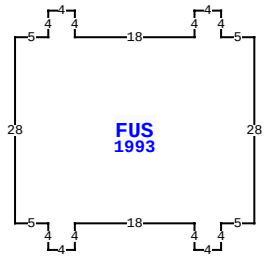

96284 PINEY ISLAND DR, FERNANDINA BEACH

BLD DATE		LGL DATE	
XF DATE		LAND DATE	03/22/2024 MLU
INC DATE		AG DATE	

NASSAU COUNTY PROPERTY — VALUATION SUMMARY

VALUATION BY		STANDARD
Tax Group: 7	Tax Dist:	
BUILDING MARKET VALUE		466,215
TOTAL MARKET OB/XF VALUE		17,945
TOTAL LAND VALUE - MARKET		150,000
TOTAL MARKET VALUE		634,160
SOH/AGL Deduction		281,320
ASSESSED VALUE		352,840
TOTAL EXEMPTION VALUE	HX HB	50,000
BASE TAXABLE VALUE		302,840
TOTAL JUST VALUE		634,160
NCON VALUE		0
INCOME VALUE		
PREVIOUS YEAR MKT VALUE		614,410

PERMIT NUM	DESCRIPTION	AMT	ISSUED
R2008748	REPAIR/RRF	18,500	10/01/2020
E25368	ELEC OTHER	0	08/01/2012
M17554	H/AC	0	08/01/2012

SALES DATA

OFF RECORD Number	DATE	TYPE INST	Q U	V I	RSN CD	SALE PRICE
1807/0437	8/09/2012	WD	Q	I	02	470,000
GRANTOR: D'ANNA FRANK J TRUSTE						
GRANTEE: BERT ARTHUR A & CAT						
1712/0738	12/01/2010	QC	U	I	11	100
GRANTOR: D'ANNA FRANK J TRUSTE						
GRANTEE: D'ANNA FRANK J TRUS						

BUILDING NOTES

BUILDING DIMENSIONS

FGR=[YR=1993] W23 S6 BAS=[YR=1993] W10 N1 FOP=[YR=1993] N8 W16 STR=[YR=1993] N3 W5 S3 E5$ W21S8 E25 U4 R3 E5 D4 R3 E1$ W1 U4 L3 W5 D4 L3 W25 S29 FOP=[YR=1993] S8 E14 UOP=[YR=1999] S5 E10 N5 W10$ E23 N8 W37$ E37 N17 E10 N11$ S17 E23 N23$ PTR=E30 FUS=[YR=1993] E5 N4 E4 S4 E18 N4 E4 S4 E5 S28 W5 S4 W4 N4 W18 S4 W4 N4 W5 N28$ W30 $.

EXTRA FEATURES

LN	OB/XF CODE	DESCRIPTION	BLD	CAP	L	W	UNITS	UT	Adj R	ADJ UNIT PRICE	ORIG COND	YEAR ON	YEAR ACTUAL	Q	% COND	OB/XF MKT VALUE	NOTES
1	0825	BRICK	0	100	0	0	281.00	SF	12.50	12.50	100	1987	1987	3	83	2,915	
2	0810	CONCRETE A	0	100	30	19	570.00	SF	6.50	6.50	100	1987	1987	3	52	1,927	
3	0810	CONCRETE A	0	100	0	0	1,483.00	SF	6.50	6.50	100	1987	1987	3	52	5,013	
4	0500	FP-PRE FAB	0	100	0	0	1.00	UT	3,500.00	3,500.00	100	1990	1990	3	68	2,380	
5	0940	SHEDS/PORT	0	100	9	10	90.00	SF	30.00	30.00	100	2012	2012	3	55	1,485	
6	0681	POLE SHED	0	100	9	9	81.00	SF	15.00	15.00	100	2012	2012	3	68	826	
7	0940	SHEDS/PORT	0	100	6	9	54.00	SF	30.00	30.00	100	2012	2012	3	55	891	
8	0940	SHEDS/PORT	0	100	19	8	152.00	SF	30.00	30.00	100	2012	2012	3	55	2,508	

LAND DESCRIPTION

TOTAL OB/XF 17,945

LN	USE CODE	CLS	LAND USE DESCRIPTION	CAP	RD	LOC ZONE	FRONT	DEPTH	TOT LND UTS	UNIT TYPE	DT	DPTH FACT	% COND	TOT ADJ	UNIT PRICE	ADJ UNIT PRICE	LAND VALUE	OTHER ADJUSTMENTS AND NOTES	YEAR	DENSITY	DECL	FRZ	YR	CONSRV
1	000100	C	SFR	100		RSF-1	0.00	0.00	1.00	LT		1.00	1.00	1.00	150,000.00	150,000.00	150,000							

REVIEW DATE 05/12/2019 BY KBA Total Acres: 0.00 Total Land Value: 150,000 Market: 0 Agricultural: 0 Common: 150,000 PRINTED 08/06/2024 BY SYS