LOT 24
LITTLE PINEY ISLAND PB 5/81

COVERSTONE JEFFREY D & DENISE FORREST
96315 PINEY ISLAND DRIVE
FERNANDINA BEACH, FL 32034

2024

47-3N-28-5000-0024-0000

BUILDING CHARACTERISTICS

ELEMENT	CD	CONSTRUCTION
Exterior Wall	31	HARDIE BRD 100
Roof Structur	08	IRREGULAR 100
Roof Cover	03	COMP SHNGL 100
Interior Wall	05	DRYWALL 100
Interior Floo	13	LVT/LAMNT 90
Interior Floo	11	CLAY TILE 10
Air Condition	03	CENTRAL 100
Heating Type	04	AIR DUCTED 100
Bedrooms		4 100
Bathrooms		2.5 100
Frame	02	WOOD FRAME 100
Stories	1.	1. 100
Units		0 100
Quality	03	Quality Level 03
DOR CODE	0100	SINGLE FAMILY
MAP NUM		MKT AREA 04
NEIGHBORHOOD/LOC	4016.00	

AREA TYPE	TOTAL GROSS AREA	PCT OF BASE	TOT ADJ AREA	SUBAREA MARKET VALUE
BAS	2,633	100	2,633	407,325
FGR	721	55	397	61,416
FOP	216	30	65	10,056
FSP	221	40	88	13,614
PTO	40	5	2	309
STP	35	10	4	619
STR	48	10	5	774
STR	50	10	5	774
STR	66	10	7	1,083
TOTALS	4,030		3,206	495,968

MARKET ADJUSTMENTS

TYPE	MDL	EFF. AREA	TOT ADJ PTS	EFF. BASE RATE	REPL. COST NEW	AYB	EYB	ECON	FNCT		NORM	% COND
0500	01	3,206	103.1320	154.70	495,968	2023	2023	0	0	0	0.00	100.00

1 SFR CUST – 100% - 2024 Heated Area: 2633 HX Base Yr 2024

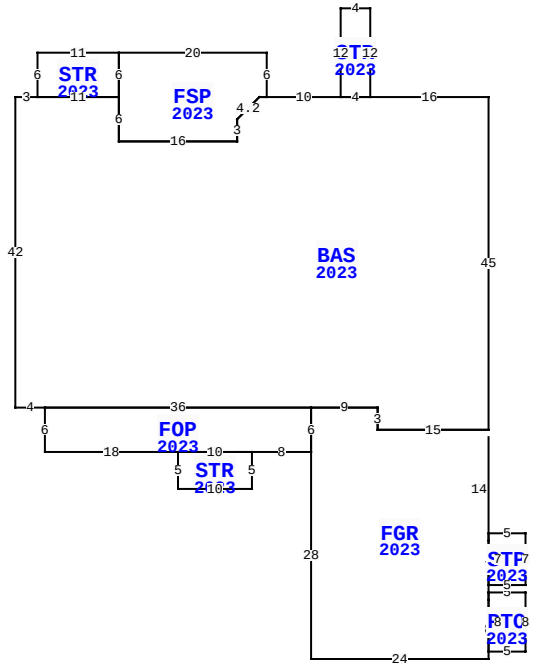

96315 PINEY ISLAND DR, FERNANDINA BEACH

BLD DATE		LGL DATE	
XF DATE		LAND DATE	03/22/2024 MLU
INC DATE		AG DATE	

NASSAU COUNTY PROPERTY

PAGE 1 of 1 7

VALUATION SUMMARY

VALUATION BY		STANDARD
Tax Group: 7	Tax Dist:	
BUILDING MARKET VALUE		495,968
TOTAL MARKET OB/XF VALUE		10,600
TOTAL LAND VALUE - MARKET		174,250
TOTAL MARKET VALUE		680,818
SOH/AGL Deduction		191,270
ASSESSED VALUE		489,548
TOTAL EXEMPTION VALUE	HX HB DX	55,000
BASE TAXABLE VALUE		434,548
TOTAL JUST VALUE		680,818
NCON VALUE		506,568
INCOME VALUE		
PREVIOUS YEAR MKT VALUE		148,750

PERMIT NUM	DESCRIPTION	AMT	ISSUED
23002144	CO ISSUED	0	02/17/2023
22003836	NEW CONSTR	444,761	03/10/2022

SALES DATA

OFF RECORD Number	DATE	TYPE INST	Q U	V I	RSN CD	SALE PRICE
2461/1964	5/07/2021	WD	Q	V	01	149,000
GRANTOR: ASHWELL STEVEN T & DR						
GRANTEE: COVERSTONE JEFFREY						
0765/1134	7/19/1996	WD	Q	V		39,500
GRANTOR: NORMAN DANIEL E & CHA						
GRANTEE: ASHWELL STEVEN T &						

BUILDING NOTES

EXTRA FEATURES

LN	OB/XF CODE	DESCRIPTION	BLD	CAP	L	W	UNITS	UT	Adj R	ADJ UNIT PRICE	ORIG COND	YEAR ON	YEAR ACTUAL	Q	% COND	OB/XF MKT VALUE	NOTES
1	0812	CONCRETE C	0	100	0	0	1,775.00	SF	4.00	4.00	100	2023	2023		100	7,100	
2	0500	FP-PRE FAB	0	100	0	0	1.00	UT	3,500.00	3,500.00	100	2023	2023		100	3,500	

BUILDING DIMENSIONS

BAS=[YR=2023;ORIG=100,10] W16 W4 W10 W1 D3L3 S3 W16 N6 W11 W3 S42 E4 E36 E9 S3 E15 N45 $
FGR=[YR=2023;ORIG=100,55] W15 N3 W9 S6 S28 E24 N8 N1 N7 N14 $
FSP=[YR=2023;ORIG=70,4] W20 S6 S6 E16 N3 U3R3 E1 N6 $
FOP=[YR=2023;ORIG=40,52] E36 S6 W8 W10 W18 N6 $
STR=[YR=2023;ORIG=50,4] W11 S6 E11 N6 $
STR=[YR=2023;ORIG=58,58] E10 S5 W10 N5 $
STR=[YR=2023;ORIG=80,-2] S12 E4 N12 W4 $
PTO=[YR=2023;ORIG=100,77] E5 S8 W5 N8 $
STP=[YR=2023;ORIG=100,69] E5 S7 W5 N7 $
.

LAND DESCRIPTION

TOTAL OB/XF 10,600

LN	USE CODE	CLS	LAND USE DESCRIPTION	CAP	RD	LOC ZONE	FRONT	DEPTH	TOT LND UTS	UNIT TYPE	DT	DPTH FACT	% COND	TOT ADJ	UNIT PRICE	ADJ UNIT PRICE	LAND VALUE	OTHER ADJUSTMENTS AND NOTES	YEAR	DENSITY	DECL	FRZ	YR	CONSRV
1	000116	C	SFR MARSH	100		RSF-1	0.00	0.00	1.00	LT		1.00	1.00	0.85	205,000.00	174,250.00	174,250							

REVIEW DATE 05/24/2023 BY MLU Total Acres: 0.00 Total Land Value: 174,250 Market: 0 Agricultural: 0 Common: 174,250 PRINTED 08/06/2024 BY SYS