LOT 1
EAGLE'S LANDING #1 PB 6/87

READ JAMES T JR & RHONDA S
45274 STRATTON ROAD
CALLAHAN, FL 32011

2024

47-2N-25-568E-0001-0000

NASSAU COUNTY PROPERTY

BUILDING CHARACTERISTICS

ELEMENT	CD	CONSTRUCTION
Exterior Wall	05	AVERAGE 100
Roof Structur	08	IRREGULAR 100
Roof Cover	03	COMP SHNGL 100
Interior Wall	05	DRYWALL 100
Interior Floo	13	LVT/LAMNT 80
Interior Floo	14	CARPET 20
Air Condition	03	CENTRAL 100
Heating Type	04	AIR DUCTED 100
Bedrooms		4 100
Bathrooms		3.5 100
Frame	02	WOOD FRAME 100
Stories	1.	1. 100
Units		0 100
Occupancy	00	NONE 100
Quality	05	Quality Level 05
DOR CODE	0100	SINGLE FAMILY
MAP NUM		MKT AREA 08
NEIGHBORHOOD/LOC	8018.00	

AREA TYPE	TOTAL GROSS AREA	PCT OF BASE	TOT ADJ AREA	SUBAREA MARKET VALUE
APT	672	100	672	82,257
BAS	2,215	100	2,215	271,129
BAS	207	100	207	25,338
FDG	720	60	432	52,879
FEP	230	80	184	22,523
FOP	120	30	36	4,407
FOP	20	30	6	735
FST	64	55	35	4,284
PTO	56	5	3	367
TOTALS	4,304		3,790	463,919

MARKET ADJUSTMENTS

TYPE	MDL	EFF. AREA	TOT ADJ PTS	EFF. BASE RATE	REPL. COST NEW	AYB	EYB	ECON	FNCT		NORM	% COND
0900	01	3,790	108.5040	135.63	514,038	2000	2003	0	0	0	9.75	90.25

1 SNGL FAM – 0% - 0 Heated Area: 3094 HX Base Yr

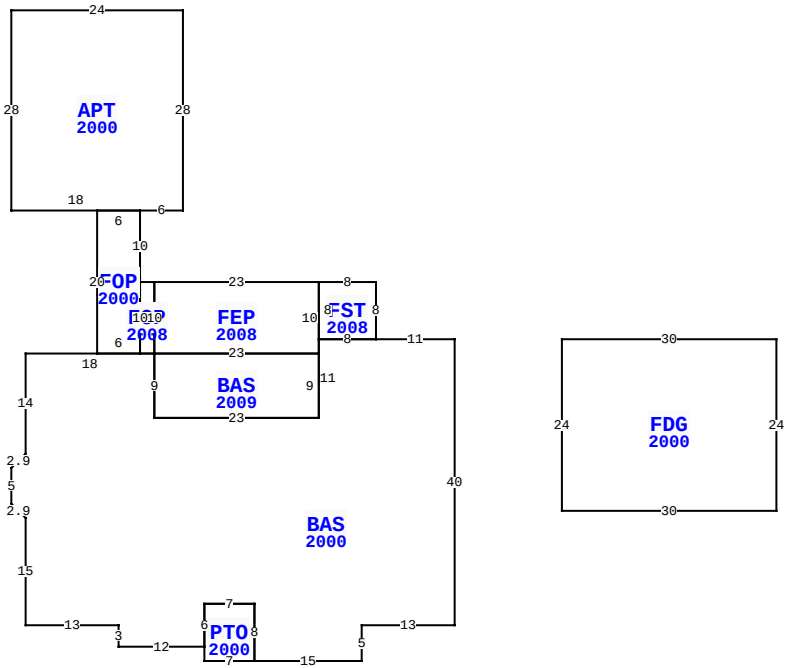

45274 STRATTON RD, CALLAHAN

BLD DATE		LGL DATE	
XF DATE		LAND DATE	
INC DATE		AG DATE	

VALUATION SUMMARY

VALUATION BY	STANDARD
Tax Group: 6	Tax Dist:
BUILDING MARKET VALUE	463,919
TOTAL MARKET OB/XF VALUE	24,221
TOTAL LAND VALUE - MARKET	60,000
TOTAL MARKET VALUE	548,140
SOH/AGL Deduction	87,974
ASSESSED VALUE	460,166
TOTAL EXEMPTION VALUE	0
BASE TAXABLE VALUE	460,166
TOTAL JUST VALUE	548,140
NCON VALUE	0
INCOME VALUE	
PREVIOUS YEAR MKT VALUE	487,526

PERMIT NUM	DESCRIPTION	AMT	ISSUED
B22654	XFOB	1,800	07/01/2009
B20865	ADDITION	15,700	12/01/2007

SALES DATA

OFF RECORD Number	DATE	TYPE INST	Q U	V I	RSN CD	SALE PRICE
2438/0645	3/01/2021	WD	Q	I	01	464,000
GRANTOR: WOODRUFF LARRY G JR &						
GRANTEE: READ JAMES T JR & R						
1950/0791	11/25/2014	WD	Q	I	01	316,000
GRANTOR: SHEFFIELD ANN						
GRANTEE: WOODRUFF LARRY G JR						

BUILDING NOTES

BUILDING DIMENSIONS

BAS=[YR=2000] W11 FST=[YR=2008] N8 W8 FEP=[YR=2008] W23 FOP=[YR=2008] W2 FOP=[YR=2000] N10 APT=[YR=2000] E6 N28 W24 S28 E18 $ W6 S20 E6 N10$ S10 E2 N10$ S10 BAS=[YR=2009] S9 E23 N9 W23$ E23 N10$ S8 E8$ W8 S11 W23 N9 W18 S14 D2 L2 S5 R2 D2 S15 E13 S3 E12 PTO=[YR=2000] S2 E7 N8 W7 S6$ N6 E7 S8 E15 N5 E13 N40$ PTR= E15 FDG=[YR=2000] E30 S24 W30 N24 $W15 $.

EXTRA FEATURES

LN	OB/XF CODE	DESCRIPTION	BLD	CAP	L	W	UNITS	UT	Adj R	ADJ UNIT PRICE	ORIG COND	YEAR ON	YEAR ACTUAL	Q	% COND	OB/XF MKT VALUE	NOTES
1	0500	FP-PRE FAB	0	0	0	0	1.00	UT	3,500.00	3,500.00	100	2000	2000	3	84	2,940	
2	1242	WD DECK A	0	0	0	0	198.00	SF	10.00	10.00	100	2000	2000	3	20	396	
3	0940	SHEDS/PORT	0	0	5	4	20.00	SF	30.00	30.00	100	2000	2000	3	20	120	
4	0810	CONCRETE A	0	0	0	0	3,095.00	SF	6.50	6.50	100	2000	2000	3	79	15,893	
5	1242	WD DECK A	0	0	0	0	1,448.00	SF	12.00	12.00	100	2000	2000	3	20	3,475	
6	1242	WD DECK A	0	0	16	12	192.00	SF	10.00	10.00	100	2005	2005	3	24	461	
7	0940	SHEDS/PORT	0	0	10	12	120.00	SF	19.50	19.50	100	2009	2009	3	40	936	

LAND DESCRIPTION

TOTAL OB/XF 24,221

LN	USE CODE	CLS	LAND USE DESCRIPTION	CAP	RD	LOC ZONE	FRONT	DEPTH	TOT LND UTS	UNIT TYPE	DT	DPTH FACT	% COND	TOT ADJ	UNIT PRICE	ADJ UNIT PRICE	LAND VALUE	OTHER ADJUSTMENTS AND NOTES	YEAR	DENSITY	DECL	FRZ	YR	CONSRV
1	000100	C	SFR	0	0006	OR	224.00	274.00	1.00	LT		1.00	1.00	1.00	60,000.00	60,000.00	60,000							

REVIEW DATE 11/13/2019 BY KBA Total Acres: 0.00 Total Land Value: 60,000 Market: 0 Agricultural: 0 Common: 60,000 PRINTED 08/06/2024 BY SYS