LOT 3
IN OR 2227/1838
COUNTRYSIDE EST PB 5/241

SMITH CLIFFORD III & CHRISTINE MARIE
45211 STRATTON ROAD
CALLAHAN, FL 32011

2024

47-2N-25-501C-0003-0000

NASSAU COUNTY PROPERTY

BUILDING CHARACTERISTICS

ELEMENT	CD	CONSTRUCTION
Exterior Wall	20	FACE BRICK 100
Roof Structur	03	GABLE/HIP 100
Roof Cover	03	COMP SHNGL 100
Interior Wall	05	DRYWALL 100
Interior Floo	14	CARPET 90
Interior Floo	08	SHT VINYL 10
Air Condition	03	CENTRAL 100
Heating Type	04	AIR DUCTED 100
Bedrooms		3 100
Bathrooms		2.5 100
Frame	02	WOOD FRAME 100
Stories	1.	1. 100
Units		0 100
Occupancy	00	NONE 100
Quality	05	Quality Level 05
DOR CODE	0100	SINGLE FAMILY
MAP NUM		MKT AREA 08
NEIGHBORHOOD/LOC	8018.00	

AREA TYPE	TOTAL GROSS AREA	PCT OF BASE	TOT ADJ AREA	SUBAREA MARKET VALUE
BAS	1,920	100	1,920	229,089
FGR	483	55	266	31,739
FOP	24	30	7	836
FOP	85	30	26	3,102
USP	170	30	51	6,085
TOTALS	2,682		2,270	270,849

MARKET ADJUSTMENTS

TYPE	MDL	EFF. AREA	TOT ADJ PTS	EFF. BASE RATE	REPL. COST NEW	AYB	EYB	ECON	FNCT		NORM	% COND
0900	01	2,270	118.5800	148.22	336,459	1992	1997	0	0	0	19.50	80.50

1 SNGL FAM – 100% - 2019 Heated Area: 1920 HX Base Yr 2019

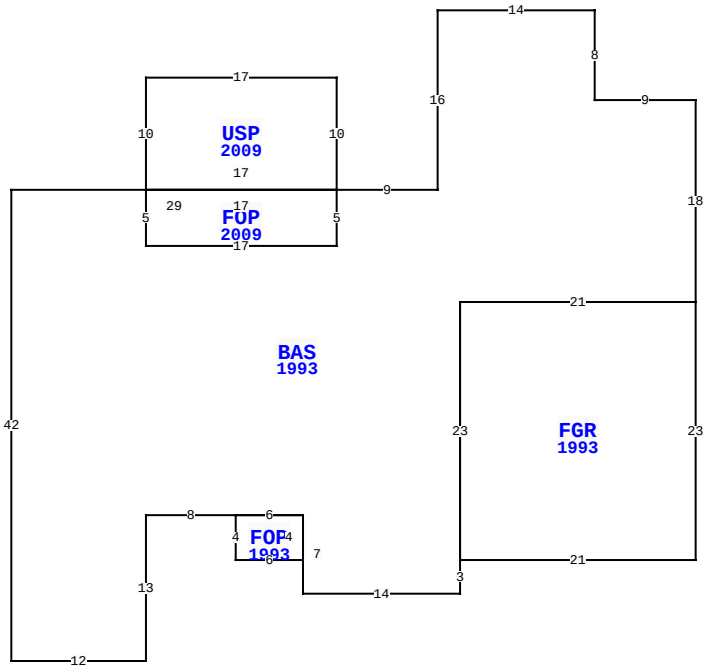

45211 STRATTON RD, CALLAHAN

BLD DATE		LGL DATE	
XF DATE		LAND DATE	
INC DATE		AG DATE	

VALUATION SUMMARY

VALUATION BY		STANDARD
Tax Group: 6	Tax Dist:	
BUILDING MARKET VALUE		270,849
TOTAL MARKET OB/XF VALUE		29,841
TOTAL LAND VALUE - MARKET		60,000
TOTAL MARKET VALUE		360,690
SOH/AGL Deduction		140,149
ASSESSED VALUE		220,541
TOTAL EXEMPTION VALUE	HX HB VX	55,000
BASE TAXABLE VALUE		165,541
TOTAL JUST VALUE		360,690
NCON VALUE		0
INCOME VALUE		
PREVIOUS YEAR MKT VALUE		326,918

PERMIT NUM	DESCRIPTION	AMT	ISSUED
R1213196	REPAIR/RRF	2,200	11/01/2012
8249	NEW CONSTR	81,830	07/20/1992

SALES DATA

OFF RECORD Number	DATE	TYPE INST	Q U	V I	RSN CD	SALE PRICE
2227/1838	10/03/2018	WD	Q	I	01	302,500
GRANTOR: ROSE MARK L & CAROL L						
GRANTEE: SMITH CLIFFORD DANI						
0663/0620	7/15/1992	WD	Q	V		22,500
GRANTOR: P C ENTERPRISES						
GRANTEE: ROSE MARK & CAROL						

BUILDING NOTES

BUILDING DIMENSIONS

BAS=[YR=1993] W9 N8 W14 S16 W9 USP=[YR=2009] N10 W17 S10 FOP=[YR=2009] S5 E17 N5 W17$E17$W29 S42 E12 N13 E8 FOP=[YR=1993] S4 E6 N4 W6$ E6 S7 E14 N3 FGR=[YR=1993] E21 N23 W21 S23 $ N23 E21 N18$.

EXTRA FEATURES

LN	OB/XF CODE	DESCRIPTION	BLD	CAP	L	W	UNITS	UT	Adj R	ADJ UNIT PRICE	ORIG COND	YEAR ON	YEAR ACTUAL	Q	% COND	OB/XF MKT VALUE	NOTES
2	0812	CONCRETE C	0	100	0	0	3,300.00	SF	4.00	4.00	100	1992	1992	3	64	8,448	
3	0500	FP-PRE FAB	0	100	0	0	1.00	UT	3,500.00	3,500.00	100	1992	1992	3	72	2,520	
4	0511	GARAGE CB-	0	100	17	17	289.00	SF	40.00	40.00	100	1993	1993	3	66	7,630	
5	0861	POOL GUNIT	0	100	12	30	360.00	SF	85.00	85.00	100	1993	1993	3	20	6,120	
6	0845	KOOL DECK	0	100	0	0	854.00	SF	7.25	7.25	100	1993	1993	3	66	4,086	
7	0351	CARPORT MT	0	100	18	24	432.00	SF	10.00	10.00	100	2005	2005	3	24	1,037	

LAND DESCRIPTION

TOTAL OB/XF 29,841

LN	USE CODE	CLS	LAND USE DESCRIPTION	CAP	RD	LOC ZONE	FRONT	DEPTH	TOT LND UTS	UNIT TYPE	DT	DPTH FACT	% COND	TOT ADJ	UNIT PRICE	ADJ UNIT PRICE	LAND VALUE	OTHER ADJUSTMENTS AND NOTES	YEAR	DENSITY	DECL	FRZ	YR	CONSRV
1	000100	C	SFR	100	0006	RSF-	1124.00	350.00	1.00	LT		1.00	1.00	1.00	60,000.00	60,000.00	60,000							

REVIEW DATE 05/12/2019 BY KBA Total Acres: 0.00 Total Land Value: 60,000 Market: 0 Agricultural: 0 Common: 60,000 PRINTED 08/06/2024 BY SYS