A PARCEL OF LAND IN THE NW
PT OF SEC 47
IN OR 1065/1371

CREWS ROBERT D & KAREN D
45211 PETREE ROAD
CALLAHAN, FL 32011

2024

47-2N-25-0000-0006-0020

BUILDING CHARACTERISTICS

ELEMENT	CD	CONSTRUCTION
Exterior Wall	20	FACE BRICK 100
Roof Structur	03	GABLE/HIP 100
Roof Cover	03	COMP SHNGL 100
Interior Wall	05	DRYWALL 100
Interior Floo	12	HARDWOOD 80
Interior Floo	11	CLAY TILE 20
Air Condition	03	CENTRAL 100
Heating Type	04	AIR DUCTED 100
Bedrooms		4 100
Bathrooms		2.5 100
Frame	02	WOOD FRAME 100
Stories	1.	1. 100
Units		0 100
Occupancy	00	NONE 100
Quality	01	Quality Level 01
DOR CODE	0100	SINGLE FAMILY
MAP NUM		MKT AREA 08
NEIGHBORHOOD/LOC	8026.00	

AREA TYPE	TOTAL GROSS AREA	PCT OF BASE	TOT ADJ AREA	SUBAREA MARKET VALUE
BAS	3,184	100	3,184	324,892
FGR	706	55	388	39,591
FOP	90	30	27	2,755
FOP	200	30	60	6,123
PTO	24	5	1	102
PTO	410	5	20	2,041
TOTALS	4,614		3,680	375,504

MARKET ADJUSTMENTS

TYPE	MDL	EFF. AREA	TOT ADJ PTS	EFF. BASE RATE	REPL. COST NEW	AYB	EYB	ECON	FNCT		NORM	% COND
0900	01	3,680	91.2060	114.01	419,557	2004	2009	0	0	0	10.50	89.50

1 SNGL FAM – 100% - 2005 Heated Area: 3184 HX Base Yr 2005

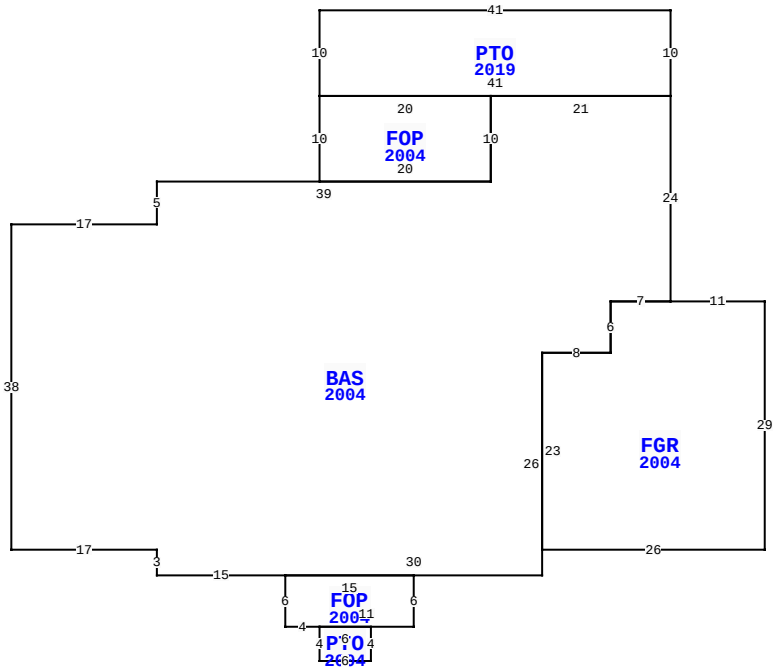

45211 PETREE RD, CALLAHAN

BLD DATE		LGL DATE	
XF DATE		LAND DATE	
INC DATE		AG DATE	

NASSAU COUNTY PROPERTY

PAGE 1 of 1 6

VALUATION SUMMARY

VALUATION BY		STANDARD
Tax Group: 6	Tax Dist:	
BUILDING MARKET VALUE		375,504
TOTAL MARKET OB/XF VALUE		8,905
TOTAL LAND VALUE - MARKET		70,000
TOTAL MARKET VALUE		454,409
SOH/AGL Deduction		250,552
ASSESSED VALUE		203,857
TOTAL EXEMPTION VALUE	HX HB	50,000
BASE TAXABLE VALUE		153,857
TOTAL JUST VALUE		454,409
NCON VALUE		0
INCOME VALUE		
PREVIOUS YEAR MKT VALUE		438,723

PERMIT NUM	DESCRIPTION	AMT	ISSUED
19004340	REPAIR/RRF	18,500	05/01/2019
P6888	NEW CONSTR	0	07/01/2003
B11194	NEW CONSTR	229,542	05/01/2003
R5088	REPAIR/RRF	7,000	05/01/2003

SALES DATA

OFF RECORD Number	DATE	TYPE INST	Q / U	V / I	RSN CD	SALE PRICE
1065/1371	6/27/2002	WD	Q	V		30,000
GRANTOR: PETREE SALVAGE CO INC						
GRANTEE: CREWS ROBERT D & KA						
0679/1484	4/27/1993	WD	U	V	01	100
GRANTOR: WHITE BLISS P						
GRANTEE: PETREE SALVAGE CO						

BUILDING NOTES

BUILDING DIMENSIONS

FGR=[YR=2004] W11 BAS=[YR=2004] N24 PTO=[YR=2019] N10 W41 S10 FOP=[YR=2004] S10 E20 N10 W20$ E41$ W21 S10 W39 S5 W17 S38 E17 S3 E15 FOP=[YR=2004] S6 E4 PTO=[YR=2004] S4 E6 N4 W6$ E11 N6 W15$ E30 N26 E8 N6 E7$ W7 S6 W8 S23 E26 N29$.

EXTRA FEATURES

LN	OB/XF CODE	DESCRIPTION	BLD	CAP	L	W	UNITS	UT	Adj R	ADJ UNIT PRICE	ORIG COND	YEAR ON	YEAR ACTUAL	Q	% COND	OB/XF MKT VALUE	NOTES
1	0500	FP-PRE FAB	0	100	0	0	1.00	UT	3,500.00	3,500.00	100	2004	2004	3	88	3,080	
2	0810	CONCRETE A	0	100	0	0	751.00	SF	6.50	6.50	100	2007	2007	3	88	4,296	
3	0810	CONCRETE A	0	100	0	0	240.00	SF	6.50	6.50	100	2019	2019	3	98	1,529	

LAND DESCRIPTION

TOTAL OB/XF 8,905

LN	USE CODE	CLS	LAND USE DESCRIPTION	CAP	RD	LOC ZONE	FRONT	DEPTH	TOT LND UTS	UNIT TYPE	DT	DPTH FACT	% COND	TOT ADJ	UNIT PRICE	ADJ UNIT PRICE	LAND VALUE	OTHER ADJUSTMENTS AND NOTES	YEAR	DENSITY	DECL	FRZ	YR	CONSRV
1	000115	C	SFR ACRES	100	0007	OR	0.00	0.00	2.00	AC		1.00	1.00	1.00	35,000.00	35,000.00	70,000							

REVIEW DATE 08/02/2019 BY KBX Total Acres: 2.00 Total Land Value: 70,000 Market: 0 Agricultural: 0 Common: 70,000 PRINTED 08/06/2024 BY SYS