LOT 75
WATERWAY OAKS AT OYSTER BAY
HARBOUR PB 7/93

PARSONS JOHN C & SHANNON
96002 PARK PL
FERNANDINA BEACH, FL 32034

2024

46-3N-28-6205-0075-0000

NASSAU COUNTY PROPERTY

BUILDING CHARACTERISTICS

ELEMENT	CD	CONSTRUCTION
Exterior Wall	31	HARDIE BRD 100
Roof Structur	08	IRREGULAR 100
Roof Cover	03	COMP SHNGL 100
Interior Wall	05	DRYWALL 100
Interior Floo	12	HARDWOOD 60
Interior Floo	14	CARPET 40
Air Condition	03	CENTRAL 100
Heating Type	04	AIR DUCTED 100
Bedrooms		4 100
Bathrooms		3 100
Frame	02	WOOD FRAME 100
Stories	2.	2. 100
Units		0 100
Occupancy	00	NONE 100
Quality	04	Quality Level 04
DOR CODE	0100	SINGLE FAMILY
MAP NUM		MKT AREA 04
NEIGHBORHOOD/LOC	4079.00	

AREA TYPE	TOTAL GROSS AREA	PCT OF BASE	TOT ADJ AREA	SUBAREA MARKET VALUE
BAS	1,984	100	1,984	402,261
FGR	449	55	247	50,079
FOP	228	30	68	13,787
FOP	240	30	72	14,598
FOP	434	30	130	26,358
FST	44	55	24	4,866
FUS	786	100	786	159,363
STR	14	10	1	203
STR	33	10	3	609
STR	84	10	8	1,622
TOTALS	4,296		3,323	673,746

MARKET ADJUSTMENTS

TYPE	MDL	EFF. AREA	TOT ADJ PTS	EFF. BASE RATE	REPL. COST NEW	AYB	EYB	ECON	FNCT		NORM	% COND
0500	11	3,323	137.2272	205.84	684,006	2019	2019	0	0	0	1.50	98.50

1 SFR CUST – 100% - 2021 Heated Area: 2770 HX Base Yr 2021

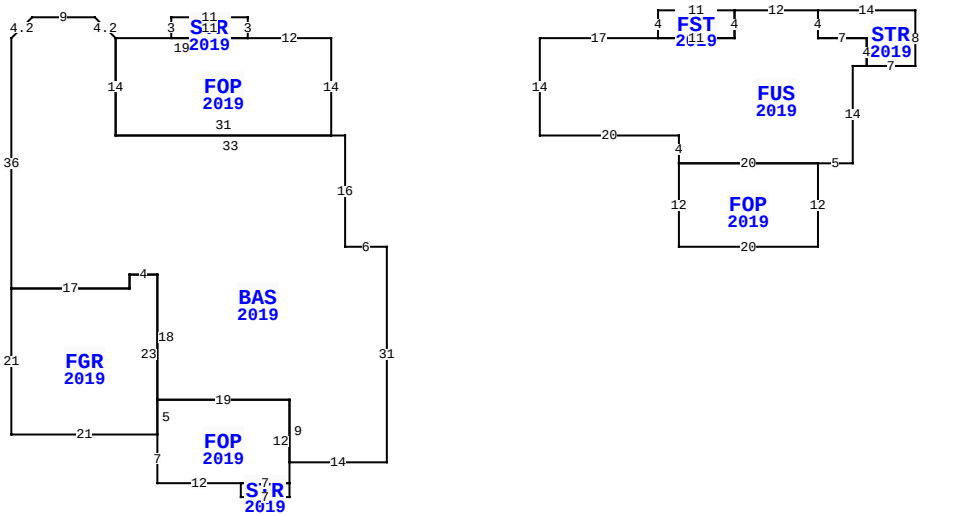

96002 PARK PL, FERNANDINA BEACH

BLD DATE		LGL DATE	
XF DATE		LAND DATE	04/04/2024 MLU
INC DATE		AG DATE	

VALUATION SUMMARY

VALUATION BY		STANDARD
Tax Group: 4	Tax Dist:	
BUILDING MARKET VALUE		673,746
TOTAL MARKET OB/XF VALUE		11,289
TOTAL LAND VALUE - MARKET		140,000
TOTAL MARKET VALUE		825,035
SOH/AGL Deduction		367,343
ASSESSED VALUE		457,692
TOTAL EXEMPTION VALUE	HX HB	50,000
BASE TAXABLE VALUE		407,692
TOTAL JUST VALUE		825,035
NCON VALUE		0
INCOME VALUE		
PREVIOUS YEAR MKT VALUE		682,506

PERMIT NUM	DESCRIPTION	AMT	ISSUED
C1806923	CO ISSUED	0	08/16/2019
B1806923	NEW CONSTR	377,983	09/01/2018

SALES DATA

OFF RECORD Number	DATE	TYPE INST	Q / U	V / I	RSN CD	SALE PRICE
2330/1643	1/08/2020	WD	Q	I	02	586,500
GRANTOR: RIVERSIDE HOMES OF N						
GRANTEE: PARSONS JOHN C & SH						
2191/0748	4/17/2018	SW	Q	V	05	562,000
GRANTOR: O B ISLAND HOMES LLC						
GRANTEE: RIVERSIDE HOMES OF						

BUILDING NOTES

BUILDING DIMENSIONS

FOP=[YR=2019] W12 STR=[YR=2019] N3 W11 S3 E11$ W19
BAS=[YR=2019] U3 L3 W9 D3 L3 S36 FGR=[YR=2019] S21 E21
FOP=[YR=2019] S7 E12 STR=[YR=2019] S2 E7 N2 W7$ E7 N12 W19
S5$ N23 W4 S2 W17$ E17 N2 E4 S18 E19 S9 E14 N31 W6 N16 W33
N14$ S14 E31 N14$ PTR= E30 FUS=[YR=2019] E17 FST=[YR=2019]
N4 E11 S4 W11$ E11 N4 E12 STR=[YR=2019] E14 S8 W7 N4 W7 N4$
S4 E7 S4 W2 S14 W5 FOP=[YR=2019] S12 W20 N12 E20$ W20 N4 W20
N14$ W30$.

EXTRA FEATURES

L N	OB/XF CODE	DESCRIPTION	BLD	CAP	L	W	UNITS	UT	Adj R	ADJ UNIT PRICE	ORIG COND	YEAR ON	YEAR ACTUAL	Q	% COND	OB/XF MKT VALUE	NOTES
1	0855	CONC PAVER	0	100	16	4	64.00	SF	10.00	10.00	100	2019	2019	3	98	627	
2	0855	CONC PAVER	0	100	0	0	1,088.00	SF	10.00	10.00	100	2019	2019	3	98	10,662	

LAND DESCRIPTION

TOTAL OB/XF 11,289

L N	USE CODE	CLS	LAND USE DESCRIPTION	CAP	R D	LOC ZONE	FRONT	DEPTH	TOT LND UTS	UNIT TYPE	D T	DPTH FACT	% COND	TOT ADJ	UNIT PRICE	ADJ UNIT PRICE	LAND VALUE	OTHER ADJUSTMENTS AND NOTES	YEAR	DENSITY	DECL	FRZ	YR	CONSRV
1	000133	C	SFR LAKE	100		PUD	0.00	0.00	1.00	LT		1.00	1.00	1.00	140,000.00	140,000.00	140,000							

REVIEW DATE 08/15/2019 BY KW Total Acres: 0.00 Total Land Value: 140,000 Market: 0 Agricultural: 0 Common: 140,000 PRINTED 08/06/2024 BY SYS