LOT 46
WATERWAY OAKS AT OYSTER BAY
HARBOUR PB 7/93

WALDROP MICHAEL S & SARAH O
1140 DERBY LN
BOGART, GA 30622

2024

46-3N-28-6205-0046-0000

BUILDING CHARACTERISTICS

ELEMENT	CD	CONSTRUCTION
Exterior Wall	31	HARDIE BRD 100
Roof Structur	08	IRREGULAR 100
Roof Cover	03	COMP SHNGL 100
Interior Wall	05	DRYWALL 100
Interior Floo	13	LVT/LAMNT 100
Air Condition	03	CENTRAL 100
Heating Type	04	AIR DUCTED 100
Bedrooms		5 100
Bathrooms		4 100
Frame	02	WOOD FRAME 100
Stories	2.	2. 100
Units		0 100
Occupancy	00	NONE 100
Quality	05	Quality Level 05
DOR CODE	0100	SINGLE FAMILY
MAP NUM		MKT AREA 04
NEIGHBORHOOD/LOC	4079.00	

AREA TYPE	TOTAL GROSS AREA	PCT OF BASE	TOT ADJ AREA	SUBAREA MARKET VALUE
BAS	2,015	100	2,015	339,413
DCK	15	10	2	337
FGR	165	55	91	15,328
FGR	510	55	280	47,164
FOP	84	30	25	4,211
FOP	180	30	54	9,096
FSP	264	40	106	17,855
FST	42	55	23	3,875
FUS	926	100	926	155,979
STR	15	10	2	337
TOTALS	4,294		3,532	594,942

MARKET ADJUSTMENTS

TYPE	MDL	EFF. AREA	TOT ADJ PTS	EFF. BASE RATE	REPL. COST NEW	AYB	EYB	ECON	FNCT		NORM	% COND
0500	01	3,532	112.8600	169.29	597,932	2021	2021	0	0	0	0.50	99.50

1 SFR CUST – 0% - 0 Heated Area: 2941 HX Base Yr

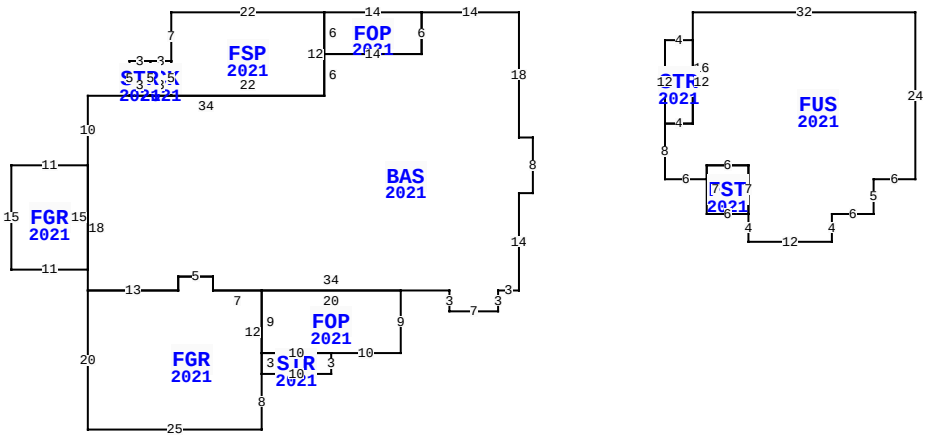

** This building has 12 Sub-Areas

96695 SOAP CREEK DR, FERNANDINA BEACH

BLD DATE		LGL DATE	
XF DATE		LAND DATE	04/04/2024 MLU
INC DATE		AG DATE	

NASSAU COUNTY PROPERTY

PAGE 1 of 1 4

VALUATION SUMMARY

VALUATION BY	STANDARD
Tax Group: 4	Tax Dist:
BUILDING MARKET VALUE	594,942
TOTAL MARKET OB/XF VALUE	39,262
TOTAL LAND VALUE - MARKET	140,000
TOTAL MARKET VALUE	774,204
SOH/AGL Deduction	43,816
ASSESSED VALUE	730,388
TOTAL EXEMPTION VALUE	0
BASE TAXABLE VALUE	730,388
TOTAL JUST VALUE	774,204
NCON VALUE	0
INCOME VALUE	
PREVIOUS YEAR MKT VALUE	742,783

PERMIT NUM	DESCRIPTION	AMT	ISSUED
C2006720	CO ISSUED	0	04/01/2021
B2006720	NEW CONSTR	404,568	09/01/2020

SALES DATA

OFF RECORD Number	DATE	TYPE INST	Q / U	V / I	RSN CD	SALE PRICE
2450/0684	4/02/2021	SW	Q	I	01	732,200
GRANTOR: HOLDER JOHNSON HOMES						
GRANTEE: WALDROP MICHAEL S &						
2378/0081	7/17/2020	WD	Q	V	01	125,000
GRANTOR: MULCAHY WILLIAM J & M						
GRANTEE: HOLDER JOHNSON HOME						

BUILDING NOTES

BUILDING DIMENSIONS

BAS=[YR=2021] W14 FOP=[YR=2021] W14 FSP=[YR=2021] W22 S7 DCK=[YR=2021] W3 STR=[YR=2021] W3 S5 E3 N5$ S5 E3 N5 $ S5 E22 N12$ S6 E14 N6$ S6 W14 S6 W34 S10 FGR=[YR=2021] W11 S15 E11 N15$ S18 FGR=[YR=2021] S20 E25 N8 STR=[YR=2021] E10 N3 FOP=[YR=2021] E10 N9 W20 S9 E10$ W10 S3$ N12 W7 N2 W5 S2 W13$ E13 N2 E5 S2 E34 S3 E7 N3 E3 N14 E2 N8 W2 N18$ PTR= E25 FUS=[YR=2021] E32 S24 W6 S5 W6 S4 W12 N4 FST=[YR=2021] W6 N7 E6 S7$ N7 W6 S2 W6 N8 STR=[YR=2021] N12 E4 S12 W4$ E4 N16$ W25$.

EXTRA FEATURES

L N	OB/XF CODE	DESCRIPTION	BLD	CAP	L	W	UNITS	UT	Adj R	ADJ UNIT PRICE	ORIG COND	YEAR ON	YEAR ACTUAL	Q	% COND	OB/XF MKT VALUE	NOTES
1	0500	FP-PRE FAB	0	0	0	0	1.00	UT	3,500.00	3,500.00	100	2021	2021	3	99	3,465	
2	0855	CONC PAVER	0	0	0	0	1,025.00	SF	10.00	10.00	100	2021	2021	3	99	10,148	
3	0855	CONC PAVER	0	0	28	24	672.00	SF	10.00	10.00	100	2021	2021	3	99	6,653	
4	0462	ST/AL FNC	0	0	216	0	864.00	SF	10.00	10.00	100	2021	2021	3	95	8,208	
5	0463	FENCE GATE	0	0	0	0	2.00	UT	300.00	300.00	100	2021	2021	3	98	588	
6	0409	ELEVATOR R	0	0	0	0	1.00	UT	10,200.00	10,200.00	100	2021	2021	3	100	10,200	

LAND DESCRIPTION

TOTAL OB/XF 39,262

L N	USE CODE	CLS	LAND USE DESCRIPTION	CAP	R D	LOC ZONE	FRONT	DEPTH	TOT LND UTS	UNIT TYPE	D T	DPTH FACT	% COND	TOT ADJ	UNIT PRICE	ADJ UNIT PRICE	LAND VALUE	OTHER ADJUSTMENTS AND NOTES	YEAR	DENSITY	DECL	FRZ	YR	CONSRV
1	000133	C	SFR LAKE	0		PUD	0.00	0.00	1.00	LT		1.00	1.00	1.00	140,000.00	140,000.00	140,000							

REVIEW DATE 01/31/2022 BY KW Total Acres: 0.00 Total Land Value: 140,000 Market: 0 Agricultural: 0 Common: 140,000 PRINTED 08/06/2024 BY SYS