LOT 34
WATERWAY OAKS AT OYSTER BAY
HARBOUR REPLAT PB 7/289

SILVERNAIL FAMILY TRUST/SILVERNAIL JESSE P TRUSTEE
96618 SOAP CREEK DR
FERNANDINA BEACH, FL 32034

2024

46-3N-28-6205-0034-0000

BUILDING CHARACTERISTICS

ELEMENT	CD	CONSTRUCTION
Exterior Wall	10	ABOVE AVG 100
Roof Structur	08	IRREGULAR 100
Roof Cover	03	COMP SHNGL 90
Roof Cover	13	STAND SEAM 10
Interior Wall	05	DRYWALL 100
Interior Floo	12	HARDWOOD 90
Interior Floo	11	CLAY TILE 10
Air Condition	03	CENTRAL 100
Heating Type	04	AIR DUCTED 100
Bedrooms		4 100
Bathrooms		4 100
Frame	02	WOOD FRAME 100
Stories	2.	2. 100
Units		0 100
Quality	04	Quality Level 04
DOR CODE	0100	SINGLE FAMILY
MAP NUM		MKT AREA 04
NEIGHBORHOOD/LOC	4079.00	

AREA TYPE	TOTAL GROSS AREA	PCT OF BASE	TOT ADJ AREA	SUBAREA MARKET VALUE
BAS	2,536	100	2,536	684,416
FGR	894	55	492	132,781
FOP	140	30	42	11,335
FOP	307	30	92	24,829
FST	25	55	14	3,778
FST	126	55	69	18,621
FST	162	55	89	24,019
FUS	1,286	100	1,286	347,066
STR	16	10	2	540
STR	35	10	4	1,080
TOTALS	6,187		4,753	1,282,740

MARKET ADJUSTMENTS

TYPE	MDL	EFF. AREA	TOT ADJ PTS	EFF. BASE RATE	REPL. COST NEW	AYB	EYB	ECON	FNCT		NORM	% COND
0500	12	4,753	182.6588	273.99	1,302,274	2019	2019	0	0	0	1.50	98.50

1 SFR CUST – 100% - 2022 Heated Area: 3822 HX Base Yr 2022

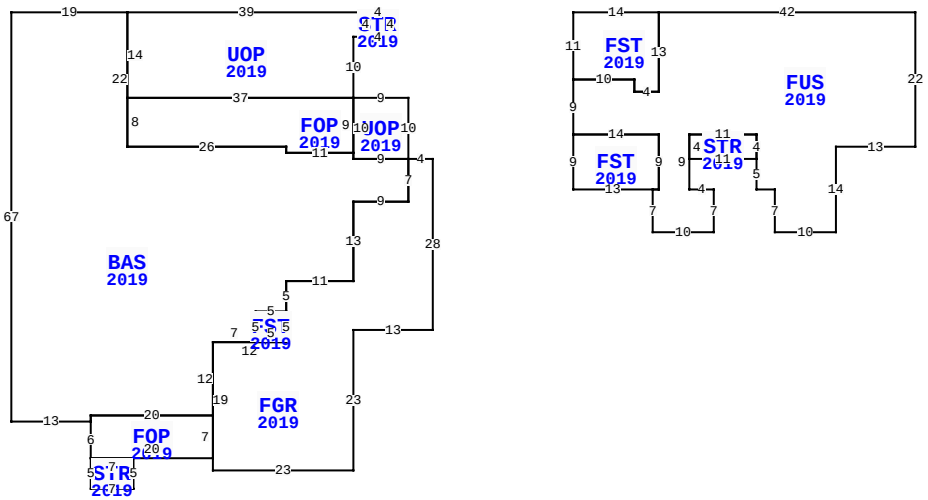

** This building has 13 Sub-Areas

96618 SOAP CREEK DR, FERNANDINA BEACH

BLD DATE		LGL DATE	
XF DATE		LAND DATE	04/04/2024 MLU
INC DATE		AG DATE	

NASSAU COUNTY PROPERTY

PAGE 1 of 1 4

VALUATION SUMMARY

VALUATION BY		STANDARD
Tax Group: 4	Tax Dist:	
BUILDING MARKET VALUE		1,282,740
TOTAL MARKET OB/XF VALUE		17,448
TOTAL LAND VALUE - MARKET		212,500
TOTAL MARKET VALUE		1,512,688
SOH/AGL Deduction		726,447
ASSESSED VALUE		786,241
TOTAL EXEMPTION VALUE	HX HB	50,000
BASE TAXABLE VALUE		736,241
TOTAL JUST VALUE		1,512,688
NCON VALUE		0
INCOME VALUE		
PREVIOUS YEAR MKT VALUE		1,143,674

PERMIT NUM	DESCRIPTION	AMT	ISSUED
C1708257	CO ISSUED	0	06/06/2019
B1708257	NEW CONSTR	482,815	09/19/2017

SALES DATA

OFF RECORD Number	DATE	TYPE INST	Q U	V I	RSN CD	SALE PRICE
2495/1218	9/08/2021	WD	Q	I	01	1,287,000
GRANTOR: BELCHER GARY G & JANI						
GRANTEE: SILVERMAIL FAMILY T						
2336/0246	1/28/2020	SW	Q	I	02	985,000
GRANTOR: OYSTER BAY TX ISLAND						
GRANTEE: BELCHER GARY G & JA						

BUILDING NOTES

BUILDING DIMENSIONS

STR=[YR=2019] W4 UOP=[YR=2019] W39 BAS=[YR=2019] W19 S67 E13 FOP=[YR=2019] S6 STR=[YR=2019] S5 E7 N5 W7$ E20 FGR=[YR=2019] S2 E23 N23 E13 N28 W4 S7 W9 S13 W11 S5 FST=[YR=2019] W5 S5 E5 N5$ S5 W12 S19$ N7 W20S1 $ N1 E20 N12 E7 N5 E5 N5 E11 N13 E9 N7 UOP=[YR=2019] N10 W9 FOP=[YR=2019] W37 S8 E26 S1 E11 N9$ S10 E9$ W9 N1 W11 N1 W26 N22$ S14 E37 N10 E2 N4$ S4 E4 N4$ PTR= E30 FST=[YR=2019] E14 FUS=[YR=2019] E42 S22 W13 S14 W10 N7 W3 N5 STR=[YR=2019] W11 N4 E11 S4$ N4 W11 S9 E4 S7 W10 N7 FST=[YR=2019] W13 N9 E14 S9 W1$ E1 N9 W14 N9 E10 S2 E4 N13$ S13 W4 N2 W10 N11$ W30$.

EXTRA FEATURES

LN	OB/XF CODE	DESCRIPTION	BLD	CAP	L	W	UNITS	UT	Adj R	ADJ UNIT PRICE	ORIG COND	YEAR ON	YEAR ACTUAL	Q	% COND	OB/XF MKT VALUE	NOTES
1	0500	FP-PRE FAB	0	100	0	0	1.00	UT	3,500.00	3,500.00	100	2019	2019	3	99	3,465	
2	0855	CONC PAVER	0	100	67	3	201.00	SF	10.00	10.00	100	2019	2019	3	98	1,970	
3	0855	CONC PAVER	0	100	0	0	1,117.00	SF	10.00	10.00	100	2019	2019	3	98	10,947	
4	1126	CB/STC 8"	0	100	17	0	136.00	SF	8.00	8.00	100	2019	2019	3	98	1,066	

LAND DESCRIPTION

TOTAL OB/XF 17,448

LN	USE CODE	CLS	LAND USE DESCRIPTION	CAP	RD	LOC ZONE	FRONT	DEPTH	TOT LND UTS	UNIT TYPE	DT	DPTH FACT	% COND	TOT ADJ	UNIT PRICE	ADJ UNIT PRICE	LAND VALUE	OTHER ADJUSTMENTS AND NOTES	YEAR	DENSITY	DECL	FRZ	YR	CONSRV
1	000116	C	SFR MARSH	100		PUD	0.00	0.00	1.00	LT		1.00	1.00	1.00	212,500.00	212,500.00	212,500							

REVIEW DATE 08/15/2019 BY KW Total Acres: 0.00 Total Land Value: 212,500 Market: 0 Agricultural: 0 Common: 212,500 PRINTED 08/06/2024 BY SYS