LOT 11
WATERWAY OAKS AT OYSTER BAY
HARBOUR PB 7/93

FERNANDINA 20 TRUST/SCHUTTE PATRICK G TRUSTEE
96194 SOAP CREEK DRIVE
FERNANDINA BEACH, FL 32034

2024

46-3N-28-6205-0011-0000

BUILDING CHARACTERISTICS

ELEMENT	CD	CONSTRUCTION
Exterior Wall	31	HARDIE BRD 100
Roof Structur	08	IRREGULAR 100
Roof Cover	03	COMP SHNGL 100
Interior Wall	05	DRYWALL 100
Interior Floo	12	HARDWOOD 60
Interior Floo	11	CLAY TILE 40
Air Condition	03	CENTRAL 100
Heating Type	04	AIR DUCTED 100
Bedrooms		5 100
Bathrooms		4 100
Frame	02	WOOD FRAME 100
Stories	2.	2. 100
Units		0 100
Occupancy	00	NONE 100
Quality	04	Quality Level 04
DOR CODE	0100	SINGLE FAMILY
MAP NUM		MKT AREA 04
NEIGHBORHOOD/LOC	4079.00	

AREA TYPE	TOTAL GROSS AREA	PCT OF BASE	TOT ADJ AREA	SUBAREA MARKET VALUE
BAS	1,633	100	1,633	347,915
BAS	339	100	339	72,224
FAT	251	20	50	10,653
FGR	675	55	371	79,042
FOP	261	30	78	16,618
FSP	240	40	96	20,453
FUS	665	100	665	141,680
PTO	132	5	7	1,491
STR	30	10	3	639
STR	36	10	4	852
TOTALS	4,358		3,256	693,700

MARKET ADJUSTMENTS

TYPE	MDL	EFF. AREA	TOT ADJ PTS	EFF. BASE RATE	REPL. COST NEW	AYB	EYB	ECON	FNCT		NORM	% COND
0500	11	3,256	147.1853	220.78	718,860	2015	2015	0	0	0	3.50	96.50

1 SFR CUST – 100% - 2021 Heated Area: 2687 HX Base Yr 2021

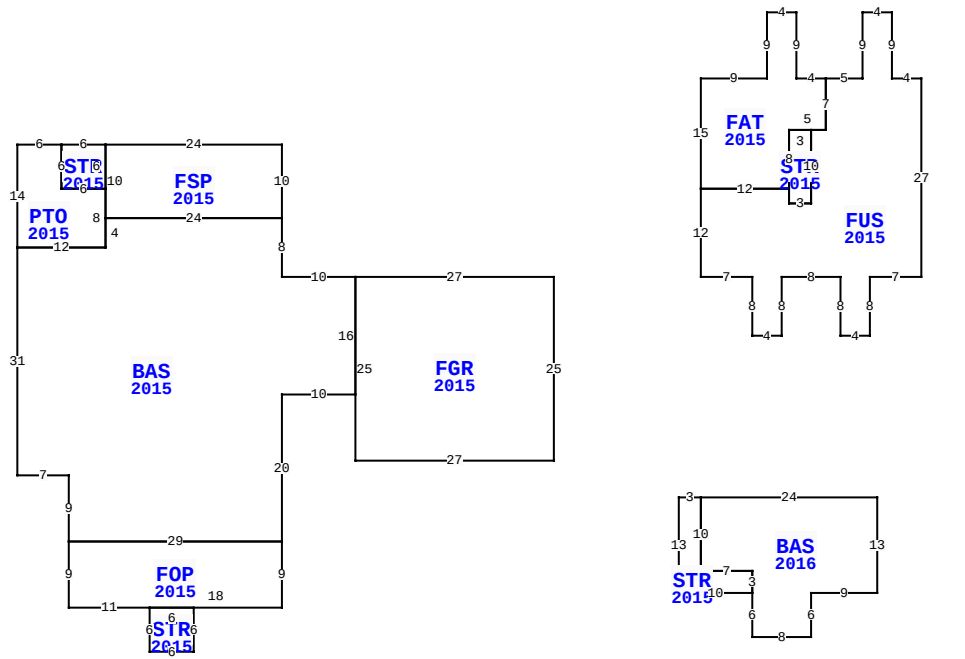

** This building has 12 Sub-Areas

96194 SOAP CREEK DR, FERNANDINA BEACH

BLD DATE		LGL DATE	
XF DATE		LAND DATE	04/04/2024 MLU
INC DATE		AG DATE	

NASSAU COUNTY PROPERTY

PAGE 1 of 1 4

VALUATION SUMMARY

VALUATION BY		STANDARD
Tax Group: 4	Tax Dist:	
BUILDING MARKET VALUE		693,700
TOTAL MARKET OB/XF VALUE		8,439
TOTAL LAND VALUE - MARKET		140,000
TOTAL MARKET VALUE		842,139
SOH/AGL Deduction		329,589
ASSESSED VALUE		512,550
TOTAL EXEMPTION VALUE	HX HB	50,000
BASE TAXABLE VALUE		462,550
TOTAL JUST VALUE		842,139
NCON VALUE		0
INCOME VALUE		
PREVIOUS YEAR MKT VALUE		720,626

PERMIT NUM	DESCRIPTION	AMT	ISSUED
B1633322	BONUSROOM	22,447	10/01/2016
B1429286	CO ISSUED	0	03/30/2015
B1429286	NEW CONSTR	370,749	09/01/2014

SALES DATA

OFF RECORD Number	DATE	TYPE INST	Q / U	V / I	RSN CD	SALE PRICE
2421/0133	12/21/2020	WD	U	I	11	100
GRANTOR: MITCHELL IRENE K & PA						
GRANTEE: FERNANDINA 20 TRUST						
2398/0446	9/30/2020	WD	U	I	11	100
GRANTOR: MITCHELL IRENE K & PA						
GRANTEE: MITCHELL IRENE K &						

BUILDING NOTES

BUILDING DIMENSIONS

FGR=[YR=2015] W27 BAS=[YR=2015] W10 N8 FSP=[YR=2015] N10 W24 STR=[YR=2015] W6 PTO=[YR=2015] W6 S14 E12 N8 W6 N6$ S6 E6 N6$ S10 E24$ W24 S4 W12 S31 E7 S9 FOP=[YR=2015] S9 E11 STR=[YR=2015] S6 E6 N6 W6$ E18 N9 W29$ E29 N20 E10 N16$ S25 E27 N25$ PTR=E20 FUS=[YR=2015] E7 S8 E4 N8 E8 S8 E4 N8 E7 N27 W4 N9 W4 S9 W5 FAT=[YR=2015] W4 N9 W4 S9 W9 S15 E12 STR=[YR=2015] S2 E3 N10 W3 S8$ N8 E5 N7$ S7 W2 S10 W3 N2 W12 S12$ S30 BAS=[YR=2016] E24 S13 W9 S6 W8 N6 STR=[YR=2015] W10 N13 E3 S10 E7 S3$ N3 W7 N10$ N30 W20$.

EXTRA FEATURES

LN	OB/XF CODE	DESCRIPTION	BLD	CAP	L	W	UNITS	UT	Adj R	ADJ UNIT PRICE	ORIG COND	YEAR ON	YEAR ACTUAL	Q	% COND	OB/XF MKT VALUE	NOTES
1	0810	CONCRETE A	0	100	41	4	164.00	SF	6.50	6.50	100	2015	2015	3	95	1,013	
2	0812	CONCRETE C	0	100	0	0	1,086.00	SF	4.00	4.00	100	2015	2015	3	95	4,127	
3	0855	CONC PAVER	0	100	13	11	143.00	SF	10.00	10.00	100	2015	2015	3	95	1,359	
4	0504	FP-ELECTRI	0	100	0	0	1.00	UT	2,000.00	2,000.00	100	2015	2015	3	97	1,940	

LAND DESCRIPTION

TOTAL OB/XF 8,439

LN	USE CODE	CLS	LAND USE DESCRIPTION	CAP	RD	LOC ZONE	FRONT	DEPTH	TOT LND UTS	UNIT TYPE	DT	DPTH FACT	% COND	TOT ADJ	UNIT PRICE	ADJ UNIT PRICE	LAND VALUE	OTHER ADJUSTMENTS AND NOTES	YEAR	DENSITY	DECL	FRZ	YR	CONSRV
1	000100	C	SFR	100		PUD	0.00	0.00	1.00	LT		1.00	1.00	1.00	140,000.00	140,000.00	140,000							

REVIEW DATE 05/12/2019 BY KBA Total Acres: 0.00 Total Land Value: 140,000 Market: 0 Agricultural: 0 Common: 140,000 PRINTED 08/06/2024 BY SYS