LOT 44
RIVERSIDE SUB PB 5/231

DANIEL CHARLIE DWELLE III/LAYES SANDRA LORELEY FER
94201 RIVER MARSH DRIVE
FERNANDINA BEACH, FL 32034

2024

46-3N-28-5500-0044-0000

NASSAU COUNTY PROPERTY

BUILDING CHARACTERISTICS

ELEMENT	CD	CONSTRUCTION
Exterior Wall	05	AVERAGE 100
Roof Structur	08	IRREGULAR 100
Roof Cover	03	COMP SHNGL 100
Interior Wall	05	DRYWALL 100
Interior Floo	14	CARPET 70
Interior Floo	11	CLAY TILE 30
Air Condition	03	CENTRAL 100
Heating Type	04	AIR DUCTED 100
Bedrooms		3 100
Bathrooms		2 100
Frame	02	WOOD FRAME 100
Stories	1.5	1.5 100
Units		0 100
Occupancy	00	NONE 100
Quality	03	Quality Level 03
DOR CODE	0100	SINGLE FAMILY
MAP NUM		MKT AREA 04
NEIGHBORHOOD/LOC	4021.00	

AREA TYPE	TOTAL GROSS AREA	PCT OF BASE	TOT ADJ AREA	SUBAREA MARKET VALUE
BAS	1,401	100	1,401	161,207
BAS	60	100	60	6,904
FGR	598	55	329	37,857
FOP	288	30	86	9,896
FOP	432	30	130	14,958
FUS	495	100	495	56,958
SFB	392	80	314	36,130
STR	30	10	3	346
TOTALS	3,696		2,818	324,254

MARKET ADJUSTMENTS

TYPE	MDL	EFF. AREA	TOT ADJ PTS	EFF. BASE RATE	REPL. COST NEW	AYB	EYB	ECON	FNCT		NORM	% COND
0900	01	2,818	105.5040	131.88	371,638	1997	1997	0	0	0	12.75	87.25

1 SNGL FAM – 100% - 2015 Heated Area: 2270 HX Base Yr 2015

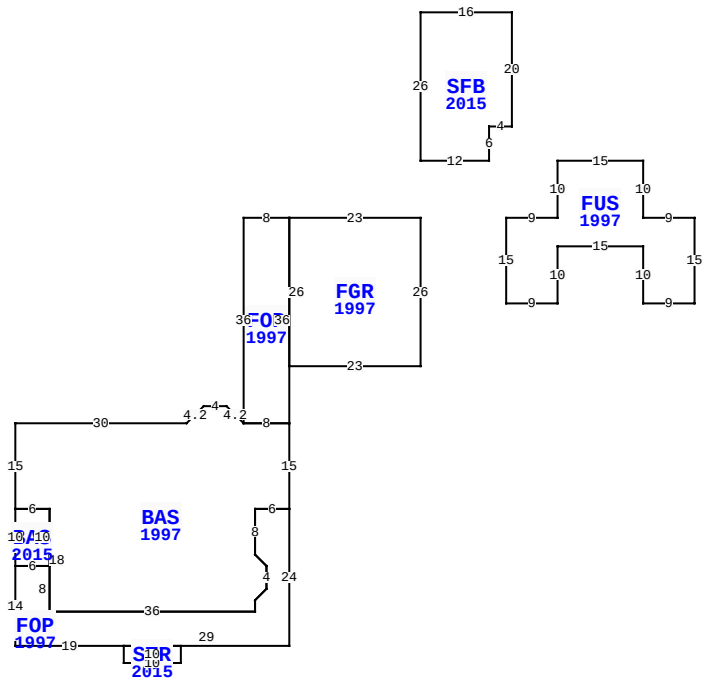

BLD DATE		LGL DATE	
XF DATE		LAND DATE	04/03/2024 MLU
INC DATE		AG DATE	

94201 RIVER MARSH DR, FERNANDINA BEACH

VALUATION SUMMARY

VALUATION BY		STANDARD
Tax Group: 4	Tax Dist:	
BUILDING MARKET VALUE		324,254
TOTAL MARKET OB/XF VALUE		9,776
TOTAL LAND VALUE - MARKET		95,000
TOTAL MARKET VALUE		429,030
SOH/AGL Deduction		204,687
ASSESSED VALUE		224,343
TOTAL EXEMPTION VALUE	HX HB	50,000
BASE TAXABLE VALUE		174,343
TOTAL JUST VALUE		429,030
NCON VALUE		0
INCOME VALUE		
PREVIOUS YEAR MKT VALUE		399,818

PERMIT NUM	DESCRIPTION	AMT	ISSUED
961601	NEW CONSTR	0	07/01/1996

SALES DATA

OFF RECORD Number	DATE	TYPE INST	Q / U	V / I	RSN CD	SALE PRICE
2333/0784	1/21/2020	QC	U	I	11	100
GRANTOR: DANIEL CHARLIE DWELLE						
GRANTEE: DANIEL CHARLIE DWEL						
1937/1152	9/15/2014	WD	Q	I	01	310,000
GRANTOR: BLOCHER JENNIFER M						
GRANTEE: DANIEL CHARLIE DWEL						

BUILDING NOTES

BUILDING DIMENSIONS

FGR=[YR=1997] W23 FOP=[YR=1997] W8 S36 BAS=[YR=1997] L3 U3 W4 D3 L3 W30 S15 BAS=[YR=2015] S10 FOP=[YR=1997] S14 E19 STR=[YR=2015] S3 E10 N3 W10 $ E29 N24 W6 S8 D2 R2 S4 L2 D2 S2 W36 N8 W6$ E6 N10 W6 $ E6 S18 E36 N2 R2 U2 N4 L2 U2 N8 E6 N15 W8$ E8 N36$ S26 E23 N26$ PTR=E15 FUS=[YR=1997] E9 N10 E15 S10 E9 S15 W9 N10 W15 S10 W9 N15$ W15$ PTR=N10 SFB=[YR=2015] N26 E16 S20 W4 S6 W12$ S10$.

EXTRA FEATURES

LN	OB/XF CODE	DESCRIPTION	BLD	CAP	L	W	UNITS	UT	Adj R	ADJ UNIT PRICE	ORIG COND	YEAR ON	YEAR ACTUAL	Q	% COND	OB/XF MKT VALUE	NOTES
1	0500	FP-PRE FAB	0	100	0	0	1.00	UT	3,500.00	3,500.00	100	1997	1997	3	80	2,800	
2	0812	CONCRETE C	0	100	0	0	2,389.00	SF	4.00	4.00	100	1997	1997	3	73	6,976	

LAND DESCRIPTION

TOTAL OB/XF 9,776

LN	USE CODE	CLS	LAND USE DESCRIPTION	CAP	RD	LOC ZONE	FRONT	DEPTH	TOT LND UTS	UNIT TYPE	DT	DPTH FACT	% COND	TOT ADJ	UNIT PRICE	ADJ UNIT PRICE	LAND VALUE	OTHER ADJUSTMENTS AND NOTES	YEAR	DENSITY	DECL	FRZ	YR	CONSRV
1	000100	C	SFR	100		RSF-1	0.00	0.00	1.00	LT		1.00	1.00	1.00	95,000.00	95,000.00	95,000							

REVIEW DATE 05/12/2019 BY KBA Total Acres: 0.00 Total Land Value: 95,000 Market: 0 Agricultural: 0 Common: 95,000 PRINTED 08/06/2024 BY SYS