LOT 17 IN OR 863/672
OYSTER BAY #5 PB 6/12

RICH CLINTON L & DEBORAH G
96174 LIGHWIND DRIVE
FERNANDINA BEACH, FL 32034

2024

46-3N-28-5484-0017-0000

NASSAU COUNTY PROPERTY

BUILDING CHARACTERISTICS

ELEMENT	CD	CONSTRUCTION
Exterior Wall	31	HARDIE BRD 100
Roof Structur	08	IRREGULAR 100
Roof Cover	03	COMP SHNGL 100
Interior Wall	05	DRYWALL 100
Interior Floo	14	CARPET 60
Interior Floo	12	HARDWOOD 40
Air Condition	03	CENTRAL 100
Heating Type	04	AIR DUCTED 100
Bedrooms		3 100
Bathrooms		2.5 100
Frame	02	WOOD FRAME 100
Stories	2.	2. 100
Units		0 100
Occupancy	00	NONE 100
Quality	04	Quality Level 04
DOR CODE	0100	SINGLE FAMILY
MAP NUM		MKT AREA 04
NEIGHBORHOOD/LOC	4024.00	

AREA TYPE	TOTAL GROSS AREA	PCT OF BASE	TOT ADJ AREA	SUBAREA MARKET VALUE
BAS	1,504	100	1,504	228,195
FGR	418	55	230	34,897
FOP	240	30	72	10,924
FSP	208	40	83	12,593
FUS	896	100	896	135,946
STP	8	10	1	152
STP	8	10	1	152
UST	264	45	119	18,056
TOTALS	3,546		2,906	440,914

MARKET ADJUSTMENTS

TYPE	MDL	EFF. AREA	TOT ADJ PTS	EFF. BASE RATE	REPL. COST NEW	AYB	EYB	ECON	FNCT		NORM	% COND
0500	01	2,906	110.5440	165.82	481,873	1999	2005	0	0	0	8.50	91.50

1 SFR CUST – 100% - 2000 Heated Area: 2400 HX Base Yr 2000

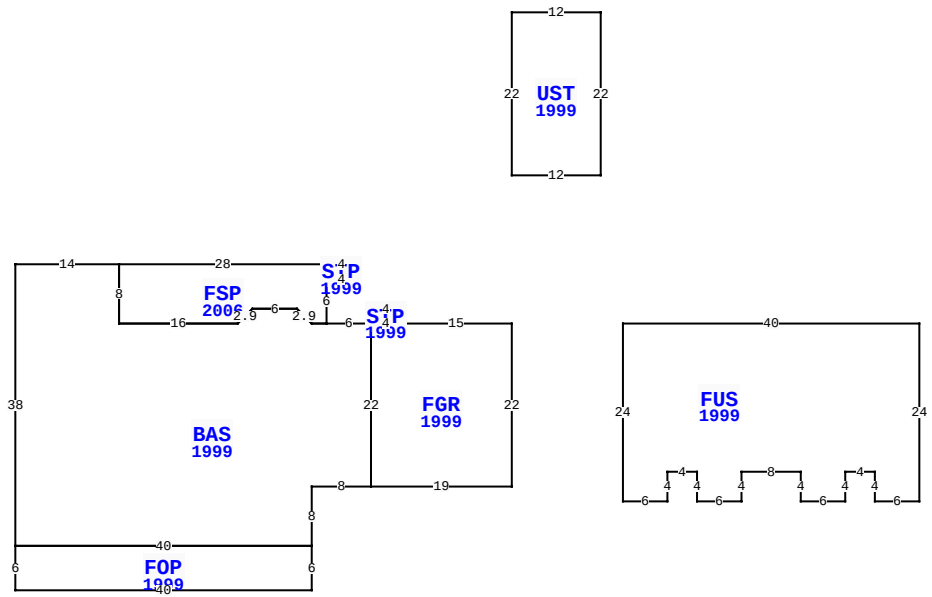

96174 LIGHT WIND DR, FERNANDINA BEACH

BLD DATE		LGL DATE	
XF DATE		LAND DATE	04/04/2024 MLU
INC DATE		AG DATE	

NASSAU COUNTY PROPERTY — VALUATION SUMMARY

VALUATION BY		STANDARD
Tax Group: 4	Tax Dist:	
BUILDING MARKET VALUE		440,914
TOTAL MARKET OB/XF VALUE		27,671
TOTAL LAND VALUE - MARKET		140,000
TOTAL MARKET VALUE		608,585
SOH/AGL Deduction		326,127
ASSESSED VALUE		282,458
TOTAL EXEMPTION VALUE	HX HB	50,000
BASE TAXABLE VALUE		232,458
TOTAL JUST VALUE		608,585
NCON VALUE		0
INCOME VALUE		
PREVIOUS YEAR MKT VALUE		565,739

PERMIT NUM	DESCRIPTION	AMT	ISSUED
B1802777	WINDOW/DOOR	2,066	04/01/2018
9905929	NEW CONSTR	111,946	04/01/1999

SALES DATA

OFF RECORD Number	DATE	TYPE INST	Q / U	V / I	RSN CD	SALE PRICE
0863/0672	1/19/1999	WD	Q	V		35,000

GRANTOR: TREVETT CONSTRUCTION
GRANTEE: RICH CLINTON L & DE

BUILDING NOTES

BUILDING DIMENSIONS

FGR=[YR=1999] W15 STP=[YR=1999] N2 W4 S2 BAS=[YR=1999] W6 FSP=[YR=2006] N6 STP=[YR=1999] E4 N2 W4 S2$ N2 W28 S8 E16 U2 R2 E6 D2 R2 E2$ W2 U2 L2 W6 D2 L2 W16 N8 W14 S38 FOP=[YR=1999] S6 E40 N6 W40$ E40 N8 E8 N22$ E4$ W4 S22E19 N22$ PTR=E15 FUS=[YR=1999] E40 S24 W6 N4 W4 S4 W6 N4 W8 S4 W6N4 W4 S4 W6 N24$ W15$ PTR=N20 UST=[YR=1999] N22 E12 S22 W12$ S20$.

EXTRA FEATURES

L N	OB/XF CODE	DESCRIPTION	BLD	CAP	L	W	UNITS	UT	Adj R	ADJ UNIT PRICE	ORIG COND	YEAR ON	YEAR ACTUAL	Q	% COND	OB/XF MKT VALUE	NOTES
1	0810	CONCRETE A	0	100	34	3	102.00	SF	6.50	6.50	100	1999	1999	3	77	511	
2	0810	CONCRETE A	0	100	70	12	840.00	SF	6.50	6.50	100	1999	1999	3	77	4,204	
3	0500	FP-PRE FAB	0	100	0	0	1.00	UT	3,500.00	3,500.00	100	1999	1999	3	83	2,905	
4	0600	SUMMER KIT	0	100	0	0	1.00	UT	5,000.00	5,000.00	100	2005	2005	3	24	1,200	
5	0861	POOL GUNIT	0	100	30	15	450.00	SF	85.00	85.00	100	2003	2003	3	32	12,240	
6	0845	KOOL DECK	0	100	0	0	360.00	SF	7.25	7.25	100	2003	2003	3	83	2,166	
7	0855	CONC PAVER	0	100	0	0	442.00	SF	10.00	10.00	100	2004	2004	3	84	3,713	
8	0479	VF PICKET	0	100	0	0	120.00	LF	10.00	10.00	100	2003	2003	3	61	732	

LAND DESCRIPTION

TOTAL OB/XF 27,671

L N	USE CODE	CLS	LAND USE DESCRIPTION	CAP	R D	LOC ZONE	FRONT	DEPTH	TOT LND UTS	UNIT TYPE	D T	DPTH FACT	% COND	TOT ADJ	UNIT PRICE	ADJ UNIT PRICE	LAND VALUE	OTHER ADJUSTMENTS AND NOTES	YEAR	DENSITY	DECL	FRZ	YR	CONSRV
1	000133	C	SFR LAKE	100		PUD	0.00	0.00	1.00	LT		1.00	1.00	1.00	140,000.00	140,000.00	140,000							

REVIEW DATE 05/12/2019 BY KBA Total Acres: 0.00 Total Land Value: 140,000 Market: 0 Agricultural: 0 Common: 140,000 PRINTED 08/06/2024 BY SYS