LOT 20
IN OR 1673/1616
OYSTER BAY #4 PB 6/24

MILLER ALAN E & CARLY J
96383 BAY VIEW DRIVE
FERNANDINA BEACH, FL 32034

2024

46-3N-28-5483-0020-0000

NASSAU COUNTY PROPERTY

PAGE 1 of 1 4

BUILDING CHARACTERISTICS

ELEMENT	CD	CONSTRUCTION
Exterior Wall	16	WD FR STUC 70
Exterior Wall	17	CB STUCCO 30
Roof Structur	01	FLAT 100
Roof Cover	04	BUILT-UP 100
Interior Wall	05	DRYWALL 100
Interior Floo	11	CLAY TILE 80
Interior Floo	14	CARPET 20
Air Condition	03	CENTRAL 100
Heating Type	04	AIR DUCTED 100
Bedrooms		5 100
Bathrooms		5 100
Frame	03	MASONRY 100
Stories	3.	3. 100
Units		0 100
Quality	04	Quality Level 04

DOR CODE	0100	SINGLE FAMILY	
MAP NUM		MKT AREA	04
NEIGHBORHOOD/LOC	4024.00		

AREA TYPE	TOTAL GROSS AREA	PCT OF BASE	TOT ADJ AREA	SUBAREA MARKET VALUE
BAL	60	15	9	1,778
BAL	198	15	30	5,929
BAL	60	15	9	1,778
BAS	930	100	930	183,799
BAS	35	100	35	6,917
BAS	163	100	163	32,214
FGR	286	55	157	31,029
FGR	299	55	164	32,412
FOP	84	30	25	4,941
FOP	134	30	40	7,905
TOTALS	7,427		5,428	1,072,757

MARKET ADJUSTMENTS

TYPE	MDL	EFF. AREA	TOT ADJ PTS	EFF. BASE RATE	REPL. COST NEW	AYB	EYB	ECON	FNCT		NORM	% COND
0500	11	5,428	145.5894	218.38	1,185,367	2004	2004	0	0	0	9.50	90.50

1 SFR CUST – 100% - 2011 Heated Area: 4620 HX Base Yr 2011

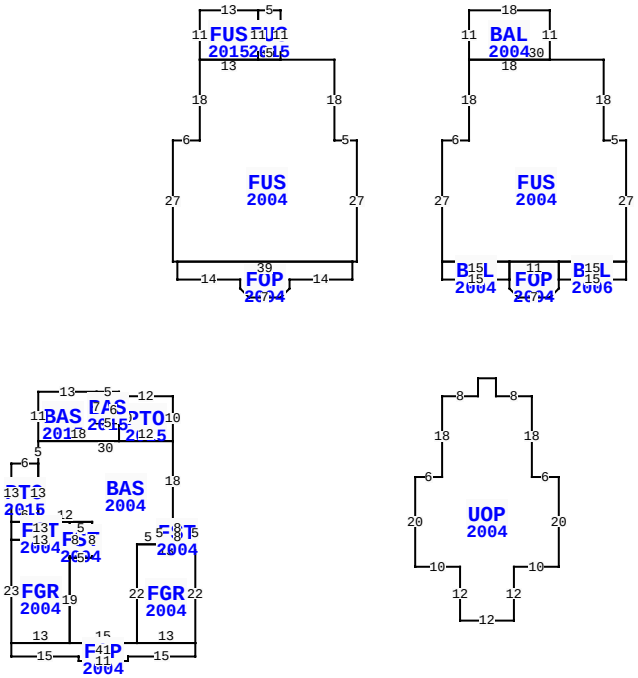

** This building has 21 Sub-Areas

96383 BAY VIEW DR, FERNANDINA BEACH

BLD DATE		LGL DATE	
XF DATE		LAND DATE	04/04/2024 MLU
INC DATE		AG DATE	

VALUATION SUMMARY

VALUATION BY		STANDARD
Tax Group: 4	Tax Dist:	
BUILDING MARKET VALUE		1,072,757
TOTAL MARKET OB/XF VALUE		18,002
TOTAL LAND VALUE - MARKET		212,500
TOTAL MARKET VALUE		1,303,259
SOH/AGL Deduction		547,651
ASSESSED VALUE		755,608
TOTAL EXEMPTION VALUE	HX HB	50,000
BASE TAXABLE VALUE		705,608
TOTAL JUST VALUE		1,303,259
NCON VALUE		0
INCOME VALUE		
PREVIOUS YEAR MKT VALUE		1,204,225

PERMIT NUM	DESCRIPTION	AMT	ISSUED
E1528617	CLOSEFOP	0	01/01/2015
006990	NEW CONSTR	250,000	03/01/2000

SALES DATA

OFF RECORD Number	DATE	TYPE INST	Q / U	V / I	RSN CD	SALE PRICE
1673/1616	4/02/2010	WD	U	I	12	650,000
GRANTOR: BRANCH BANKING & TRUS						
GRANTEE: MILLER ALAN E & CAR						
1634/1022	8/11/2009	CT	U	I	18	100
GRANTOR: CLERK OF COURT						
GRANTEE: BRANCH BANKING & TR						

BUILDING NOTES

BUILDING DIMENSIONS

PTO=[YR=2015] W12 BAS=[YR=2015] N1 W5 BAS=[YR=2015] W13 S11 BAS=[YR=2004] S5 PTO=[YR=2015] W6 S13 FST=[YR=2004] S4 FGR=[YR=2004] S23 FOP=[YR=2004] S3 E15 S1 E11 N1 E15 N3 FGR=[YR=2004] N22 FST=[YR=2004] N5 W8 S5 E8$ W13 S22 E13$ W41$ E13 N19 FST=[YR=2004] E5 N8 W5 S8$ N4 W13$ E13 N4 W13$ E6 N13$ S13 E12 S8 W5 S19 E15 N22 E5 N5 E3 N18 W30$ E18 N4 W5 N7$ S7 E5 N6$ S10 E12 N10$ PTR=N30 FUS=[YR=2004] N27 E6N18 FUS=[YR=2015] N11 E13 FUS=[YR=2015] E5 S11 W5 N11$ S11 W13$ E30 S18 E5 S27 W1 FOP=[YR=2004] S4 W14 S2 D2 L2 W7 U2 L2 N2 W14 N4 E39$ W40$ S30$ PTR=E60 N30 FUS=[YR=2004] N27 E6 N18 BAL=[YR=2004] N11 E18 S11 W18$ E30 S18 E5S27 BAL=[YR=2006] S4 W15 FOP=[YR=2004] S2 D2 L2 W7 U2 L2 N2 BAL=[YR=2004]

EXTRA FEATURES

LN	OB/XF CODE	DESCRIPTION	BLD	CAP	L	W	UNITS	UT	Adj R	ADJ UNIT PRICE	ORIG COND	YEAR ON	YEAR ACTUAL	Q	% COND	OB/XF MKT VALUE	NOTES
1	0812	CONCRETE C	0	100	0	0	1,197.00	SF	4.00	4.00	100	2004	2004	3	84	4,022	
2	0500	FP-PRE FAB	0	100	0	0	2.00	UT	3,500.00	3,500.00	100	2004	2004	3	88	6,160	
3	1123	CB 8"	0	100	18	0	72.00	SF	6.15	6.15	100	2004	2004	3	84	372	
4	0855	CONC PAVER	0	100	0	0	784.00	SF	10.00	10.00	100	2015	2015	3	95	7,448	

LAND DESCRIPTION

TOTAL OB/XF 18,002

LN	USE CODE	CLS	LAND USE DESCRIPTION	CAP	RD	LOC ZONE	FRONT	DEPTH	TOT LND UTS	UNIT TYPE	DT	DPTH FACT	% COND	TOT ADJ	UNIT PRICE	ADJ UNIT PRICE	LAND VALUE	OTHER ADJUSTMENTS AND NOTES	YEAR	DENSITY	DECL	FRZ	YR	CONSRV
1	000116	C	SFR MARSH	100		PUD	0.00	0.00	1.00	LT		1.00	1.00	1.00	212,500.00	212,500.00	212,500							

REVIEW DATE 05/12/2019 BY KBA Total Acres: 0.00 Total Land Value: 212,500 Market: 0 Agricultural: 0 Common: 212,500 PRINTED 08/06/2024 BY SYS