LOT 9
OYSTER BAY #3 PB 5/397

STILES FAMILY LIVING TRUST/STILES GLENN SCOTT CO T
96127 BAY VIEW DR
FERNANDINA BEACH, FL 32034-6175

**2024**

**46-3N-28-5482-0009-0000**

## NASSAU COUNTY PROPERTY



## BUILDING CHARACTERISTICS

| ELEMENT | CD | CONSTRUCTION |
|---|---|---|
| Exterior Wall | 14 | WD SHINGLE 50 |
| Exterior Wall | 17 | CB STUCCO 50 |
| Roof Structur | 08 | IRREGULAR 100 |
| Roof Cover | 13 | STAND SEAM 100 |
| Interior Wall | 05 | DRYWALL 100 |
| Interior Floo | 12 | HARDWOOD 80 |
| Interior Floo | 11 | CLAY TILE 20 |
| Air Condition | 03 | CENTRAL 100 |
| Heating Type | 04 | AIR DUCTED 100 |
| Bedrooms | | 5 100 |
| Bathrooms | | 4 100 |
| Frame | 02 | WOOD FRAME 100 |
| Stories | 2. | 2. 100 |
| Units | | 0 100 |
| Occupancy | 00 | NONE 100 |
| Quality | 04 | Quality Level 04 |
| DOR CODE | 0100 | SINGLE FAMILY |
| MAP NUM | | MKT AREA 04 |
| NEIGHBORHOOD/LOC | 4024.00 | |

| AREA TYPE | TOTAL GROSS AREA | PCT OF BASE | TOT ADJ AREA | SUBAREA MARKET VALUE |
|---|---|---|---|---|
| BAS | 1,198 | 100 | 1,198 | 259,717 |
| FGR | 1,034 | 55 | 569 | 123,355 |
| FOP | 217 | 30 | 65 | 14,091 |
| FOP | 270 | 30 | 81 | 17,560 |
| FOP | 272 | 30 | 82 | 17,777 |
| FOP | 272 | 30 | 82 | 17,777 |
| FST | 25 | 55 | 14 | 3,035 |
| FST | 320 | 55 | 176 | 38,155 |
| FUS | 3,101 | 100 | 3,101 | 672,272 |
| STR | 207 | 10 | 21 | 4,553 |
| TOTALS | 7,126 | | 5,483 | 1,188,672 |

## MARKET ADJUSTMENTS

| TYPE | MDL | EFF. AREA | TOT ADJ PTS | EFF. BASE RATE | REPL. COST NEW | AYB | EYB | ECON | FNCT | | NORM | % COND |
|---|---|---|---|---|---|---|---|---|---|---|---|---|
| 0500 | 11 | 5,483 | 156.2484 | 234.37 | 1,285,051 | 2008 | 2008 | 0 | 0 | 0 | 7.50 | 92.50 |

1 SFR CUST – 100% - 2014 Heated Area: 4299 HX Base Yr 2014

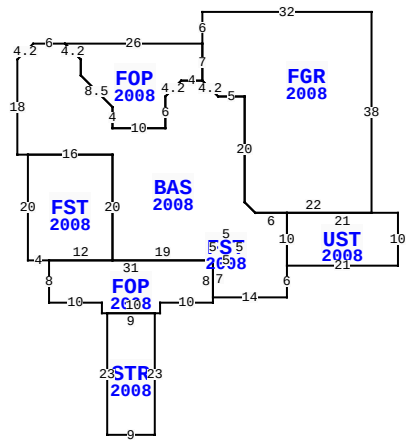


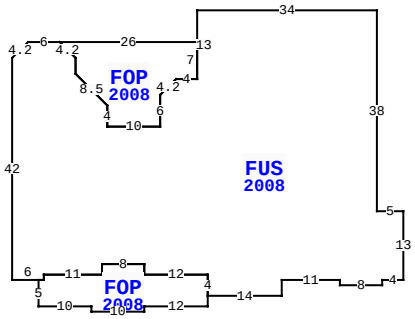


** This building has 11 Sub-Areas

96127 BAY VIEW DR, FERNANDINA BEACH

| | | | |
|---|---|---|---|
| BLD DATE | | LGL DATE | |
| XF DATE | | LAND DATE | 04/04/2024 MLU |
| INC DATE | | AG DATE | |

## VALUATION SUMMARY

| | | |
|---|---|---|
| VALUATION BY | | STANDARD |
| Tax Group: 4 | Tax Dist: | |
| BUILDING MARKET VALUE | | 1,188,672 |
| TOTAL MARKET OB/XF VALUE | | 31,481 |
| TOTAL LAND VALUE - MARKET | | 212,500 |
| TOTAL MARKET VALUE | | 1,432,653 |
| SOH/AGL Deduction | | 611,300 |
| ASSESSED VALUE | | 821,353 |
| TOTAL EXEMPTION VALUE | HX HB | 50,000 |
| BASE TAXABLE VALUE | | 771,353 |
| TOTAL JUST VALUE | | 1,432,653 |
| NCON VALUE | | 0 |
| INCOME VALUE | | |
| PREVIOUS YEAR MKT VALUE | | 1,177,823 |

| PERMIT NUM | DESCRIPTION | AMT | ISSUED |
|---|---|---|---|
| C20784 | CO ISSUED | 480,000 | 11/07/2008 |
| M13690 | MECH OTHER | 0 | 03/01/2008 |
| E20263 | ELEC OTHER | 2,000 | 11/01/2007 |
| R10878 | REPAIR/RRF | 12,000 | 11/01/2007 |
| B20784 | NEW CONSTR | 480,000 | 11/01/2007 |

## SALES DATA

| OFF RECORD Number | DATE | TYPE INST | Q / U | V / I | RSN CD | SALE PRICE |
|---|---|---|---|---|---|---|
| 2628/0966 | 3/14/2023 | WD | U | I | 11 | 100 |
| GRANTOR: SILES GLENN SCOTT & E | | | | | | |
| GRANTEE: STILES FAMILY LIVIN | | | | | | |
| 2626/1335 | 3/14/2023 | WD | U | I | 11 | 100 |
| GRANTOR: MILES GLENN SCOTT & E | | | | | | |
| GRANTEE: STILES FAMILY LIVIN | | | | | | |

## BUILDING NOTES

## EXTRA FEATURES

| LN | OB/XF CODE | DESCRIPTION | BLD | CAP | L | W | UNITS | UT | Adj R | ADJ UNIT PRICE | ORIG COND | YEAR ON | YEAR ACTUAL | Q | % COND | OB/XF MKT VALUE | NOTES |
|---|---|---|---|---|---|---|---|---|---|---|---|---|---|---|---|---|---|
| 1 | 0409 | ELEVATOR R | 0 | 100 | 0 | 0 | 1.00 | UT | 10,200.00 | 10,200.00 | 100 | 2008 | 2008 | 3 | 100 | 10,200 | |
| 2 | 0500 | FP-PRE FAB | 0 | 100 | 0 | 0 | 1.00 | UT | 3,500.00 | 3,500.00 | 100 | 2008 | 2008 | 3 | 92 | 3,220 | |
| 3 | 0855 | CONC PAVER | 0 | 100 | 0 | 0 | 2,899.00 | SF | 7.00 | 7.00 | 100 | 2008 | 2008 | 3 | 89 | 18,061 | |

## BUILDING DIMENSIONS

FGR=[YR=2008] W32 S6 FOP=[YR=2008] W26 BAS=[YR=2008] W6 D3 L3 S18 E2 FST=[YR=2008] S20 E4 FOP=[YR=2008] S8 E10 S2 E1 STR=[YR=2008] S23 E9 N23 W9 $ E10 N2 E10 N8 FST=[YR=2008] E5 N5 W5 S5 $ W31 $ E12 N20 W16 $ E16 S20 E19 N5 E5 S5 W5 S7 E14 N6 UST=[YR=2008] E21 N10 W21 S10 $ N10 W6 U2 L2 N20 W5 U3 L3 W4 D3 L3 S6 W10 N4 U6 L6 N3 U3 L3 $ D3 R3 S3 R6 D6 S4 E10 N6 U3 R3 E4 N7 $ S7 D3 R3 E5 S20 D2 R2 E22 N38 $ PTR=E30 FUS=[YR=2008] U3 R3 E6 FOP=[YR=2008] E26 S7 W4 D3 L3 S6 W10 N4 U6 L6 N3 U3 L3 $ D3 R3 S3 D6 R6 S4 E10 N6 U3 R3 E4 N13 E34 S38 E5 S13 W4 S1 W8 N1 W11 S3 W14 FOP=[YR=2008] S2 W12 S1 W10 N1 W10 N5 E1 N1 E11 N2 E8 S2 E12 S4 $ N4 W12 N2 W8 S2 W11 S1 W6 N42$ W30 $ .

## LAND DESCRIPTION

TOTAL OB/XF 31,481

| LN | USE CODE | CLS | LAND USE DESCRIPTION | CAP | RD | LOC ZONE | FRONT | DEPTH | TOT LND UTS | UNIT TYPE | DT | DPTH FACT | % COND | TOT ADJ | UNIT PRICE | ADJ UNIT PRICE | LAND VALUE | OTHER ADJUSTMENTS AND NOTES | YEAR | DENSITY | DECL | FRZ | YR | CONSRV |
|---|---|---|---|---|---|---|---|---|---|---|---|---|---|---|---|---|---|---|---|---|---|---|---|---|
| 1 | 000116 | C | SFR MARSH | 100 | | PUD | 0.00 | 0.00 | 1.00 | LT | | 1.00 | 1.00 | 1.00 | 212,500.00 | 212,500.00 | 212,500 | | | | | | | |

REVIEW DATE 05/05/2020 BY KWA Total Acres: 0.00 Total Land Value: 212,500 Market: 0 Agricultural: 0 Common: 212,500 PRINTED 08/06/2024 BY SYS