LOT B-34
VILLAS AT OYSTER BAY HARBOURS
PBK 8/229

MCKELWAY DOUGLAS & SUSAN J
96576 COMPASS POINT DR
FERNANDINA BEACH, FL 32034

2024

46-3N-28-5481-0B34-0000

BUILDING CHARACTERISTICS

ELEMENT	CD	CONSTRUCTION
Exterior Wall	10	ABOVE AVG 50
Exterior Wall	17	CB STUCCO 50
Roof Structur	08	IRREGULAR 100
Roof Cover	13	STAND SEAM 100
Interior Wall	05	DRYWALL 100
Interior Floo	11	CLAY TILE 70
Interior Floo	14	CARPET 30
Air Condition	03	CENTRAL 100
Heating Type	04	AIR DUCTED 100
Bedrooms		3 100
Bathrooms		2.5 100
Frame	02	WOOD FRAME 100
Stories	2.	2. 100
Units		0 100
Quality	04	Quality Level 04
DOR CODE	0100	SINGLE FAMILY
MAP NUM		MKT AREA 04
NEIGHBORHOOD/LOC	4024.100	

AREA TYPE	TOTAL GROSS AREA	PCT OF BASE	TOT ADJ AREA	SUBAREA MARKET VALUE
BAS	187	100	187	43,140
FGR	1,310	55	720	166,102
FOP	110	30	33	7,613
FOP	110	30	33	7,613
FOP	170	30	51	11,765
FOP	170	30	51	11,765
FOP	561	30	168	38,757
FST	42	55	23	5,306
FUS	25	100	25	5,767
FUS	80	100	80	18,456
TOTALS	4,860		3,398	783,907

MARKET ADJUSTMENTS

TYPE	MDL	EFF. AREA	TOT ADJ PTS	EFF. BASE RATE	REPL. COST NEW	AYB	EYB	ECON	FNCT		NORM	% COND
0500	11	3,398	154.9574	232.44	789,831	2021	2021	0	0	0	0.75	99.25

1 SFR CUST – 100% - 2022 Heated Area: 2311 HX Base Yr 2022

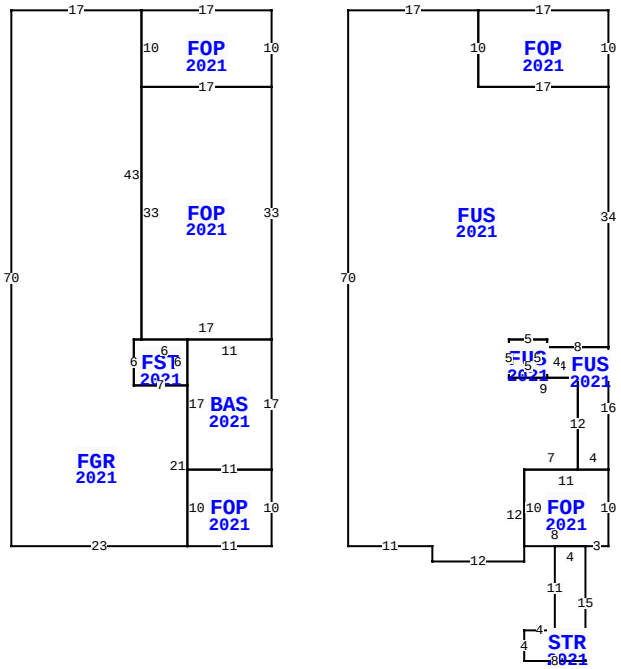

** This building has 12 Sub-Areas

96576 COMPASS POINT DR, FERNANDINA BEACH

BLD DATE		LGL DATE	
XF DATE		LAND DATE	04/04/2024 MLU
INC DATE		AG DATE	

NASSAU COUNTY PROPERTY

PAGE 1 of 1 4

VALUATION SUMMARY

VALUATION BY		STANDARD
Tax Group: 4	Tax Dist:	
BUILDING MARKET VALUE		783,907
TOTAL MARKET OB/XF VALUE		23,387
TOTAL LAND VALUE - MARKET		160,000
TOTAL MARKET VALUE		967,294
SOH/AGL Deduction		270,314
ASSESSED VALUE		696,980
TOTAL EXEMPTION VALUE	HX HB	50,000
BASE TAXABLE VALUE		646,980
TOTAL JUST VALUE		967,294
NCON VALUE		0
INCOME VALUE		
PREVIOUS YEAR MKT VALUE		916,956

PERMIT NUM	DESCRIPTION	AMT	ISSUED
C2005277	CO ISSUED	0	10/29/2021
B2005277	NEW CONSTR	371,229	08/01/2020

SALES DATA

OFF RECORD Number	DATE	TYPE INST	Q / U	V / I	RSN CD	SALE PRICE
2512/0252	10/29/2021	WD	Q	I	02	694,800
GRANTOR: NEW ATLANTIC BUILDERS						
GRANTEE: MCKELWAY DOUGLAS &						
2282/1335	6/07/2019	SW	Q	V	01	115,000
GRANTOR: O B ISLAND HOMES LLC						
GRANTEE: NEW ATLANTIC BUILDE						

BUILDING NOTES

BUILDING DIMENSIONS

FOP=[YR=2021] W17 FGR=[YR=2021] W17 S70 E23 FOP=[YR=2021] E11 N10 BAS=[YR=2021] N17 FOP=[YR=2021] N33 W17 S33 FST=[YR=2021] W1 S6 E7 N6 W6$ E17$ W11 S17 E11$ W11 S10$ N21 W7 N6 E1 N43$ S10 E17 N10$ PTR= E10 FUS=[YR=2021] E17 FOP=[YR=2021] E17 S10 W17 N10$ S10 E17 S34 FUS=[YR=2021] S16 FOP=[YR=2021] S10 W3 STR=[YR=2021] S15 W8 N4 E4 N11 E4$ W8 N10 E11$ W4 N12 W4 FUS=[YR=2021] W5 N5 E5 S5$ N4 E8$ W8 N1 W5 S5 E9 S12 W7 S12 W12 N2 W11 N70$ W10$.

EXTRA FEATURES

LN	OB/XF CODE	DESCRIPTION	BLD	CAP	L	W	UNITS	UT	Adj R	ADJ UNIT PRICE	ORIG COND	YEAR ON	YEAR ACTUAL	Q	% COND	OB/XF MKT VALUE	NOTES
1	0500	FP-PRE FAB	0	100	0	0	1.00	UT	3,500.00	3,500.00	100	2021	2021	3	99	3,465	
2	0409	ELEVATOR R	0	100	0	0	1.00	UT	10,200.00	10,200.00	100	2021	2021	3	100	10,200	
3	0855	CONC PAVER	0	100	0	0	982.00	SF	10.00	10.00	100	2021	2021	3	99	9,722	

LAND DESCRIPTION

TOTAL OB/XF 23,387

LN	USE CODE	CLS	LAND USE DESCRIPTION	CAP	RD	LOC ZONE	FRONT	DEPTH	TOT LND UTS	UNIT TYPE	DT	DPTH FACT	% COND	TOT ADJ	UNIT PRICE	ADJ UNIT PRICE	LAND VALUE	OTHER ADJUSTMENTS AND NOTES	YEAR	DENSITY	DECL	FRZ	YR	CONSRV
1	000116	C	SFR MARSH	100		PUD	0.00	0.00	1.00	LT		1.00	1.00	1.00	160,000.00	160,000.00	160,000							

REVIEW DATE 01/31/2022 BY KW Total Acres: 0.00 Total Land Value: 160,000 Market: 0 Agricultural: 0 Common: 160,000 PRINTED 08/06/2024 BY SYS