LOT C-9
VILLAS AT OYSTER BAY HARBOURS
PBK 8/229

MINDER KAREN R & GARY
96422 CONTESSA POINT DR
FERNANDINA BEACH, FL 32034

2024

46-3N-28-5481-00C9-0000

BUILDING CHARACTERISTICS

ELEMENT	CD	CONSTRUCTION
Exterior Wall	31	HARDIE BRD 66
Exterior Wall	17	CB STUCCO 34
Roof Structur	08	IRREGULAR 100
Roof Cover	13	STAND SEAM 100
Interior Wall	05	DRYWALL 100
Interior Floo	12	HARDWOOD 90
Interior Floo	11	CLAY TILE 10
Air Condition	03	CENTRAL 100
Heating Type	04	AIR DUCTED 100
Bedrooms		3 100
Bathrooms		3.5 100
Frame	03	MASONRY 100
Stories	3.	3. 100
Units		0 100
Quality	04	Quality Level 04

DOR CODE	0100	SINGLE FAMILY	
MAP NUM		MKT AREA	04
NEIGHBORHOOD/LOC	4024.100		

AREA TYPE	TOTAL GROSS AREA	PCT OF BASE	TOT ADJ AREA	SUBAREA MARKET VALUE
BAS	96	100	96	21,463
BAS	1,337	100	1,337	298,913
FGR	911	55	501	112,009
FOP	109	30	33	7,378
FOP	140	30	42	9,390
FOP	170	30	51	11,402
FOP	459	30	138	30,853
FUS	1,388	100	1,388	310,315
STR	74	10	7	1,565
STR	115	10	12	2,683
TOTALS	4,799		3,605	805,970

MARKET ADJUSTMENTS

TYPE	MDL	EFF. AREA	TOT ADJ PTS	EFF. BASE RATE	REPL. COST NEW	AYB	EYB	ECON	FNCT		NORM	% COND
0500	11	3,605	149.0465	223.57	805,970	2023	2023	0	0	0	0.00	100.00

1 SFR CUST - 100% - 2024 Heated Area: 2821 HX Base Yr 2024

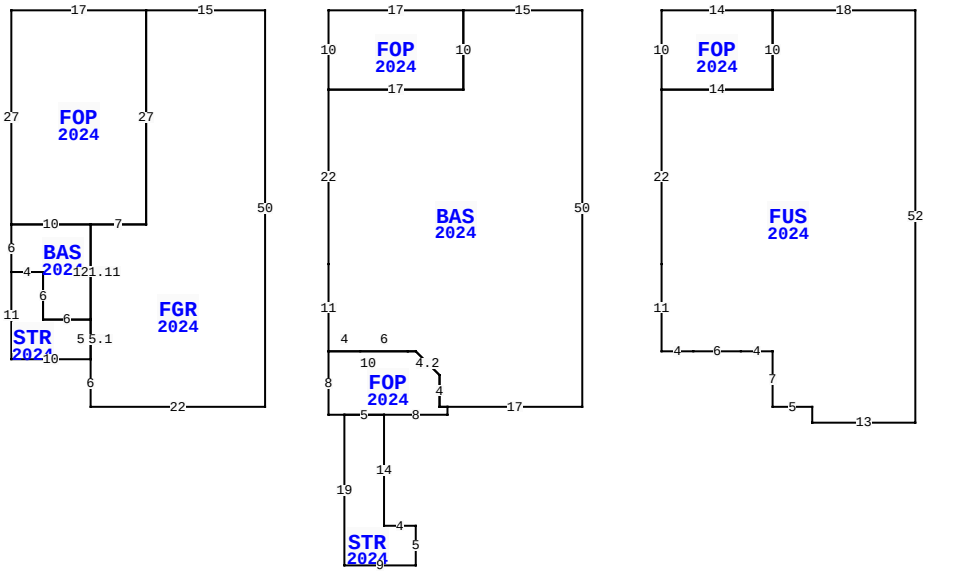

BLD DATE		LGL DATE	
XF DATE		LAND DATE	04/04/2024 MLU
INC DATE		AG DATE	

96422 CONTESSA POINT DR, FERNANDINA BEACH

NASSAU COUNTY PROPERTY

PAGE 1 of 1 4

VALUATION SUMMARY

VALUATION BY		STANDARD
Tax Group: 4	Tax Dist:	
BUILDING MARKET VALUE		805,970
TOTAL MARKET OB/XF VALUE		18,100
TOTAL LAND VALUE - MARKET		160,000
TOTAL MARKET VALUE		984,070
SOH/AGL Deduction		0
ASSESSED VALUE		984,070
TOTAL EXEMPTION VALUE	HX HB	50,000
BASE TAXABLE VALUE		934,070
TOTAL JUST VALUE		984,070
NCON VALUE		824,070
INCOME VALUE		
PREVIOUS YEAR MKT VALUE		145,000

PERMIT NUM	DESCRIPTION	AMT	ISSUED
			11/27/2023
22008526	NEW CONSTR	477,034	06/02/2022

SALES DATA

OFF RECORD Number	DATE	TYPE INST	Q U /	V I /	RSN CD	SALE PRICE
2682/75	11/22/2023	SW	Q	I	01	840,500
GRANTOR: ARTISAN HOMES LLC						
GRANTEE: MINDER KAREN R & GA						
2476/0489	7/01/2021	SW	Q	V	05	1,560,000
GRANTOR: O B ISLAND HOMES LLC						
GRANTEE: ARTISAN HOMES LLC						

BUILDING NOTES

EXTRA FEATURES

L N	OB/XF CODE	DESCRIPTION	BLD	CAP	L	W	UNITS	UT	Adj R	ADJ UNIT PRICE	ORIG COND	YEAR ON	YEAR ACTUAL	Q	% COND	OB/XF MKT VALUE	NOTES
1	0855	CONC PAVER	0	100	0	0	790.00	SF	10.00	10.00	100	2024	2023		100	7,900	
2	0409	ELEVATOR R	0	100	0	0	1.00	UT	10,200.00	10,200.00	100	2024	2023		100	10,200	

BUILDING DIMENSIONS

FUS=[YR=2024;ORIG=100,20] E14 N10 E18 S52 W13 N2 W5 N7 W4 W6 W4 N11 N22 $
BAS=[YR=2024;ORIG=75,10] E15 S50 W17 W1 N4 U3L3 W1 W6 W4 N11 N22 E17 N10 $
FGR=[YR=2024;ORIG=50,10] W15 S27 W7 S11.11 S5.1 S6 E22 N50 $
FOP=[YR=2024;ORIG=35,10] W17 S27 E10 E7 N27 $
FOP=[YR=2024;ORIG=58,10] E17 S10 W17 N10 $
FOP=[YR=2024;ORIG=100,10] E14 S10 W14 N10 $
STR=[YR=2024;ORIG=60,61] E5 S14 E4 S5 W9 N19 $
FOP=[YR=2024;ORIG=73,60] S1 W8 W5 W2 N8 E10 E1 D3R3 S4 E1 $
BAS=[YR=2024;ORIG=28,37] W10 S6 E4 S6 E6 N12 $
STR=[YR=2024;ORIG=18,43] E4 S6 E6 S5 W10 N11 $

LAND DESCRIPTION

TOTAL OB/XF 18,100

L N	USE CODE	CLS	LAND USE DESCRIPTION	CAP	R D	LOC ZONE	FRONT	DEPTH	TOT LND UTS	UNIT TYPE	D T	DPTH FACT	% COND	TOT ADJ	UNIT PRICE	ADJ UNIT PRICE	LAND VALUE	OTHER ADJUSTMENTS AND NOTES	YEAR	DENSITY	DECL	FRZ	YR	CONSRV
1	000116	C	SFR MARSH	100			0.00	0.00	1.00	LT		1.00	1.00	1.00	160,000.00	160,000.00	160,000							

REVIEW DATE 01/04/2024 BY DJ Total Acres: 0.00 Total Land Value: 160,000 Market: 0 Agricultural: 0 Common: 160,000 PRINTED 08/06/2024 BY SYS