LOT 19
NORTH SHORE SUB PB 5/255-256

HARTING TREVER
94283 SUMMER BREEZE DR
FERNANDINA BEACH, FL 32034

**2024**

**46-3N-28-5340-0019-0000**

## NASSAU COUNTY PROPERTY



## BUILDING CHARACTERISTICS

| ELEMENT | CD | CONSTRUCTION |
|---|---|---|
| Exterior Wall | 20 | FACE BRICK 100 |
| Roof Structur | 08 | IRREGULAR 100 |
| Roof Cover | 03 | COMP SHNGL 100 |
| Interior Wall | 05 | DRYWALL 100 |
| Interior Floo | 13 | LVT/LAMNT 90 |
| Interior Floo | 11 | CLAY TILE 10 |
| Air Condition | 03 | CENTRAL 100 |
| Heating Type | 04 | AIR DUCTED 100 |
| Bedrooms | | 3 100 |
| Bathrooms | | 3 100 |
| Frame | 02 | WOOD FRAME 100 |
| Stories | 1. | 1. 100 |
| Units | | 0 100 |
| Occupancy | 00 | NONE 100 |
| Quality | 03 | Quality Level 03 |
| DOR CODE | 0100 | SINGLE FAMILY |
| MAP NUM | | MKT AREA 04 |
| NEIGHBORHOOD/LOC | 4021.00 | |

| AREA TYPE | TOTAL GROSS AREA | PCT OF BASE | TOT ADJ AREA | SUBAREA MARKET VALUE |
|---|---|---|---|---|
| BAS | 2,406 | 100 | 2,406 | 279,025 |
| FGR | 650 | 55 | 358 | 41,517 |
| FOP | 90 | 30 | 27 | 3,131 |
| FOP | 265 | 30 | 80 | 9,278 |
| PTO | 273 | 5 | 14 | 1,624 |
| TOTALS | 3,684 | | 2,885 | 334,575 |

## MARKET ADJUSTMENTS

| TYPE | MDL | EFF. AREA | TOT ADJ PTS | EFF. BASE RATE | REPL. COST NEW | AYB | EYB | ECON | FNCT | | NORM | % COND |
|---|---|---|---|---|---|---|---|---|---|---|---|---|
| 0900 | 01 | 2,885 | 107.2540 | 134.07 | 386,792 | 2000 | 2005 | 0 | 0 | 0 | 13.50 | 86.50 |

1 SNGL FAM – 0% - 2023 Heated Area: 2406 HX Base Yr

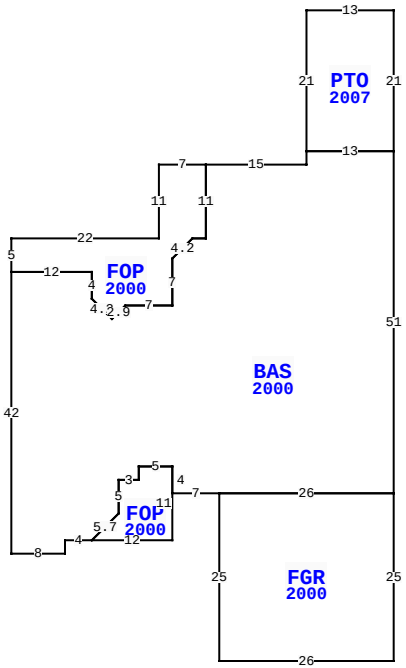


94283 SUMMER BREEZE DR, FERNANDINA BEACH

| | | | |
|---|---|---|---|
| BLD DATE | | LGL DATE | |
| XF DATE | | LAND DATE | 04/03/2024 MLU |
| INC DATE | | AG DATE | |

## VALUATION SUMMARY

| | |
|---|---|
| VALUATION BY | STANDARD |
| Tax Group: 4 | Tax Dist: |
| BUILDING MARKET VALUE | 334,575 |
| TOTAL MARKET OB/XF VALUE | 30,363 |
| TOTAL LAND VALUE - MARKET | 95,000 |
| TOTAL MARKET VALUE | 459,938 |
| SOH/AGL Deduction | 0 |
| ASSESSED VALUE | 459,938 |
| TOTAL EXEMPTION VALUE | 0 |
| BASE TAXABLE VALUE | 459,938 |
| TOTAL JUST VALUE | 459,938 |
| NCON VALUE | 0 |
| INCOME VALUE | |
| PREVIOUS YEAR MKT VALUE | 432,640 |

| PERMIT NUM | DESCRIPTION | AMT | ISSUED |
|---|---|---|---|
| | | | |

## SALES DATA

| OFF RECORD Number | DATE | TYPE INST | Q / U | V / I | RSN CD | SALE PRICE |
|---|---|---|---|---|---|---|
| 2590/0831 | 9/08/2022 | WD | Q | I | 01 | 600,000 |
| GRANTOR: CHAIRES JUSTIN & JAMI | | | | | | |
| GRANTEE: HARTING TREVER | | | | | | |
| 1921/1765 | 6/09/2014 | CT | U | I | 18 | 185,500 |
| GRANTOR: CLERK OF COURT | | | | | | |
| GRANTEE: CHAIRES JUSTIN & JA | | | | | | |

## BUILDING NOTES

## BUILDING DIMENSIONS

PTO=[YR=2007] W13 S21 BAS=[YR=2000] S2 W15 FOP=[YR=2000] W7 S11 W22 S5 E12 S4 D3 R3 R2 U2 E7 N7 R3 U3 E2 N11$ S11 W2 D3 L3 S7 W7 D2 L2 L3 U3 N4 W12 S42 E8 N2 E4 FOP=[YR=2000] E12 N11 W5 S2 W3 S5 L4 D4 $ U4 R4 N5 E3 N2 E5 S4 E7 FGR=[YR=2000] S25 E26 N25 W26$ E26 N51 W13$ E13 N21$.

## EXTRA FEATURES

| LN | OB/XF CODE | DESCRIPTION | BLD | CAP | L | W | UNITS | UT | Adj R | ADJ UNIT PRICE | ORIG COND | YEAR ON | YEAR ACTUAL | Q | % COND | OB/XF MKT VALUE | NOTES |
|---|---|---|---|---|---|---|---|---|---|---|---|---|---|---|---|---|---|
| 1 | 0500 | FP-PRE FAB | 0 | 0 | 0 | 0 | 1.00 | UT | 3,500.00 | 3,500.00 | 100 | 2000 | 2000 | 3 | 84 | 2,940 | |
| 2 | 0811 | CONCRETE B | 0 | 0 | 0 | 0 | 1,836.00 | SF | 5.20 | 5.20 | 100 | 2000 | 2000 | 3 | 79 | 7,542 | |
| 3 | 0911 | SCRN RM A | 0 | 0 | 0 | 0 | 1,225.00 | SF | 17.50 | 17.50 | 100 | 2003 | 2003 | 3 | 21 | 4,502 | |
| 4 | 0845 | KOOL DECK | 0 | 0 | 0 | 0 | 847.00 | SF | 7.25 | 7.25 | 100 | 2003 | 2003 | 3 | 83 | 5,097 | |
| 5 | 0861 | POOL GUNIT | 0 | 0 | 0 | 0 | 378.00 | SF | 85.00 | 85.00 | 100 | 2003 | 2003 | 3 | 32 | 10,282 | |

## LAND DESCRIPTION

TOTAL OB/XF 30,363

| LN | USE CODE | CLS | LAND USE DESCRIPTION | CAP | RD | LOC ZONE | FRONT | DEPTH | TOT LND UTS | UNIT TYPE | DT | DPTH FACT | % COND | TOT ADJ | UNIT PRICE | ADJ UNIT PRICE | LAND VALUE | OTHER ADJUSTMENTS AND NOTES | YEAR | DENSITY | DECL | FRZ | YR | CONSRV |
|---|---|---|---|---|---|---|---|---|---|---|---|---|---|---|---|---|---|---|---|---|---|---|---|---|
| 1 | 000100 | C | SFR | 0 | | RSF-1 | 0.00 | 0.00 | 1.00 | LT | | 1.00 | 1.00 | 1.00 | 95,000.00 | 95,000.00 | 95,000 | | | | | | | |

REVIEW DATE 11/22/2019 BY KWA Total Acres: 0.00 Total Land Value: 95,000 Market: 0 Agricultural: 0 Common: 95,000 PRINTED 08/06/2024 BY SYS