LOT 12
NORTH SHORE SUB PB 5/255-256

HAYES RICHARD
94232 SUMMER BREEZE DR
FERNANDINA BEACH, FL 32034

2024

46-3N-28-5340-0012-0000

NASSAU COUNTY PROPERTY

BUILDING CHARACTERISTICS

ELEMENT	CD	CONSTRUCTION
Exterior Wall	20	FACE BRICK 100
Roof Structur	03	GABLE/HIP 100
Roof Cover	03	COMP SHNGL 100
Interior Wall	05	DRYWALL 100
Interior Floo	11	CLAY TILE 100
Air Condition	03	CENTRAL 100
Heating Type	04	AIR DUCTED 100
Bedrooms		4 100
Bathrooms		3 100
Frame	02	WOOD FRAME 100
Stories	1.5	1.5 100
Units		0 100
Occupancy	00	NONE 100
Quality	03	Quality Level 03

DOR CODE 0100 SINGLE FAMILY
MAP NUM | MKT AREA 04
NEIGHBORHOOD/LOC 4021.00

AREA TYPE	TOTAL GROSS AREA	PCT OF BASE	TOT ADJ AREA	SUBAREA MARKET VALUE
BAS	2,134	100	2,134	241,668
DCK	30	10	3	340
DCK	35	10	4	453
FGR	572	55	315	35,672
FOP	52	30	16	1,812
FUS	522	100	522	59,115
TOTALS	3,345		2,994	339,060

MARKET ADJUSTMENTS

TYPE	MDL	EFF. AREA	TOT ADJ PTS	EFF. BASE RATE	REPL. COST NEW	AYB	EYB	ECON	FNCT		NORM	% COND
0900	01	2,994	114.6800	143.35	429,190	1990	1995	0	0	0	21.00	79.00

1 SNGL FAM – 100% - 2024 Heated Area: 2656 HX Base Yr 2024

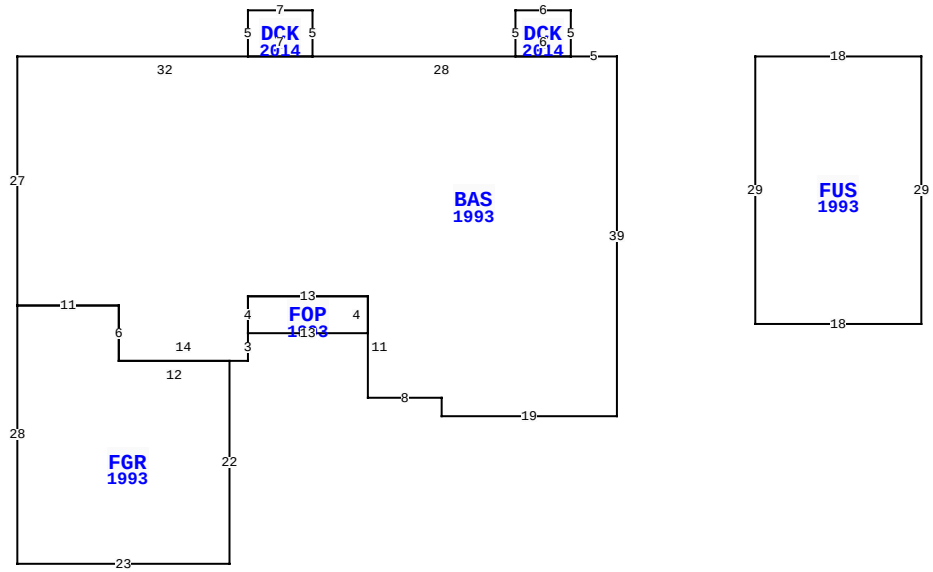

94232 SUMMER BREEZE DR, FERNANDINA BEACH

BLD DATE		LGL DATE	
XF DATE		LAND DATE	04/02/2024 MLU
INC DATE		AG DATE	

VALUATION SUMMARY

VALUATION BY		STANDARD
Tax Group: 4	Tax Dist:	
BUILDING MARKET VALUE		339,060
TOTAL MARKET OB/XF VALUE		13,869
TOTAL LAND VALUE - MARKET		175,000
TOTAL MARKET VALUE		527,929
SOH/AGL Deduction		0
ASSESSED VALUE		527,929
TOTAL EXEMPTION VALUE	HX HB	50,000
BASE TAXABLE VALUE		477,929
TOTAL JUST VALUE		527,929
NCON VALUE		0
INCOME VALUE		
PREVIOUS YEAR MKT VALUE		499,488

PERMIT NUM	DESCRIPTION	AMT	ISSUED
007042	SWIM POOL	5,000	04/01/2000
7261	XFOB	7,250	05/23/1991
5970	NEW CONSTR	77,208	08/31/1989

SALES DATA

OFF RECORD Number	DATE	TYPE INST	Q / U	V / I	RSN CD	SALE PRICE
2677/1031	10/26/2023	QC	U	I	11	100
GRANTOR: SUMMERBREEZENORTH LLC						
GRANTEE: HAYES RICHARD						
2600/0333	10/26/2022	WD	Q	I	01	565,000
GRANTOR: STOUT JAMES & RICHARD						
GRANTEE: SUMMERBREEZENORTH L						

BUILDING NOTES

BUILDING DIMENSIONS

BAS=[YR=1993] W5 DCK=[YR=2014] N5 W6 S5 E6 $ W28
DCK=[YR=2014] N5 W7 S5 E7$ W32 S27 FGR=[YR=1993] S28 E23 N22 W12 N6 W11$ E11 S6 E14 N3 FOP=[YR=1993] E13 N4 W13 S4$ N4 E13 S11 E8 S2 E19 N39$ PTR= E15FUS=[YR=1993] E18 S29 W18 N29$ W15$.

EXTRA FEATURES

L N	OB/XF CODE	DESCRIPTION	BLD	CAP	L	W	UNITS	UT	Adj R	ADJ UNIT PRICE	ORIG COND	YEAR ON	YEAR ACTUAL	Q	% COND	OB/XF MKT VALUE	NOTES
1	0812	CONCRETE C	0	100	0	0	2,587.00	SF	4.00	4.00	100	1990	1990	3	59.5	6,157	
2	0500	FP-PRE FAB	0	100	0	0	1.00	UT	3,500.00	3,500.00	100	1990	1990	3	68	2,380	
3	0810	CONCRETE A	0	100	0	0	581.00	SF	6.50	6.50	100	1991	1991	3	62	2,341	
4	0810	CONCRETE A	0	100	24	14	336.00	SF	6.50	6.50	100	2000	2000	3	79	1,725	
5	0810	CONCRETE A	0	100	0	0	253.00	SF	6.50	6.50	100	1999	1999	3	77	1,266	

LAND DESCRIPTION

TOTAL OB/XF 13,869

L N	USE CODE	CLS	LAND USE DESCRIPTION	CAP	R D	LOC ZONE	FRONT	DEPTH	TOT LND UTS	UNIT TYPE	D T	DPTH FACT	% COND	TOT ADJ	UNIT PRICE	ADJ UNIT PRICE	LAND VALUE	OTHER ADJUSTMENTS AND NOTES	YEAR	DENSITY	DECL	FRZ	YR	CONSRV
1	000116	C	SFR MARSH	100		RSF-1	0.00	0.00	1.00	LT		1.00	1.00	1.00	175,000.00	175,000.00	175,000							

REVIEW DATE 01/19/2023 BY DJA Total Acres: 0.00 Total Land Value: 175,000 Market: 0 Agricultural: 0 Common: 175,000 PRINTED 08/06/2024 BY SYS