LOTS 10 & 11
THE COVE @ OYSTER BAY PB 6/79

SCHULTZ FAMILY TRUST/SCHULTZ THEODORE J TRUSTEE
96260 PARK PLACE
FERNANDINA BEACH, FL 32034

2024

46-3N-28-5065-0011-0000

NASSAU COUNTY PROPERTY

BUILDING CHARACTERISTICS

ELEMENT	CD	CONSTRUCTION
Exterior Wall	31	HARDIE BRD 100
Roof Structur	08	IRREGULAR 100
Roof Cover	13	STAND SEAM 100
Interior Wall	05	DRYWALL 100
Interior Floo	11	CLAY TILE 70
Interior Floo	14	CARPET 30
Air Condition	03	CENTRAL 100
Heating Type	04	AIR DUCTED 100
Bedrooms		4 100
Bathrooms		3.5 100
Frame	02	WOOD FRAME 100
Stories	2.	2. 100
Units		0 100
Occupancy	00	NONE 100
Quality	04	Quality Level 04
DOR CODE	0100	SINGLE FAMILY
MAP NUM		MKT AREA 04
NEIGHBORHOOD/LOC	4024.00	

AREA TYPE	TOTAL GROSS AREA	PCT OF BASE	TOT ADJ AREA	SUBAREA MARKET VALUE
BAL	84	15	13	2,236
BAS	1,583	100	1,583	272,308
BAS	159	100	159	27,351
BAS	240	100	240	41,285
FGR	625	55	344	59,175
FGR	300	55	165	28,383
FOP	343	30	103	17,718
FOP	452	30	136	23,395
FUS	1,005	100	1,005	172,880
STP	24	10	2	344
TOTALS	4,878		3,763	647,311

MARKET ADJUSTMENTS

TYPE	MDL	EFF. AREA	TOT ADJ PTS	EFF. BASE RATE	REPL. COST NEW	AYB	EYB	ECON	FNCT		NORM	% COND
0500	01	3,763	121.9995	183.00	688,629	2006	2010	0	0	0	6.00	94.00

1 SFR CUST – 100% - 2015 Heated Area: 2987 HX Base Yr 2015

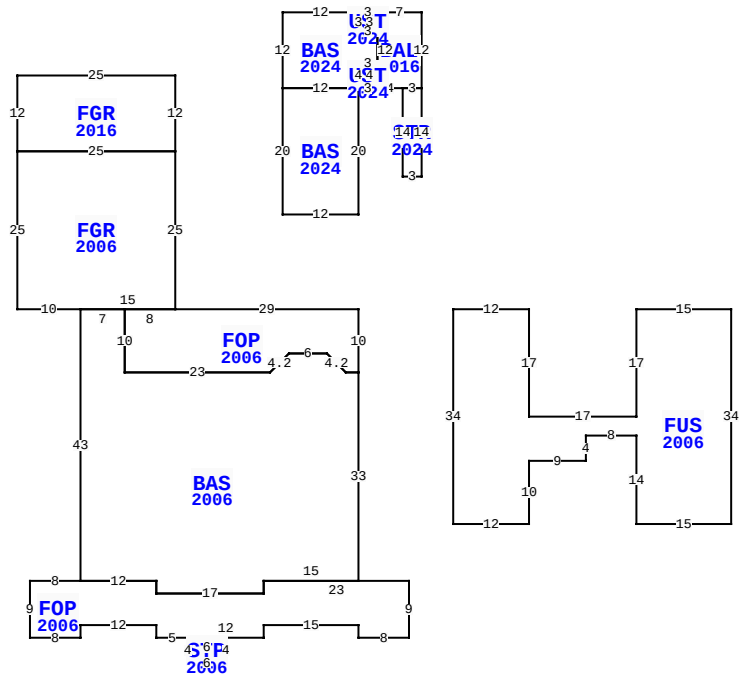

** This building has 13 Sub-Areas

96260 PARK PL, FERNANDINA BEACH

BLD DATE		LGL DATE	
XF DATE		LAND DATE	04/04/2024 MLU
INC DATE		AG DATE	

VALUATION SUMMARY

VALUATION BY		STANDARD
Tax Group: 4	Tax Dist:	
BUILDING MARKET VALUE		647,311
TOTAL MARKET OB/XF VALUE		15,806
TOTAL LAND VALUE - MARKET		280,000
TOTAL MARKET VALUE		943,117
SOH/AGL Deduction		426,679
ASSESSED VALUE		516,438
TOTAL EXEMPTION VALUE	HX HB	50,000
BASE TAXABLE VALUE		466,438
TOTAL JUST VALUE		943,117
NCON VALUE		28,955
INCOME VALUE		
PREVIOUS YEAR MKT VALUE		902,566

PERMIT NUM	DESCRIPTION	AMT	ISSUED
B2011100	(10) WINDOWS	22,541	11/13/2020
B1803702	(2) WINDOWS	7,067	05/01/2018
B1631838	GARAGE	25,574	02/01/2016
M0509669	H/AC	0	05/01/2005
C13539	CO ISSUED	0	12/01/2004
B13539	NEW CONSTR	0	12/01/2004

SALES DATA

OFF RECORD Number	DATE	TYPE INST	Q / U	V / I	RSN CD	SALE PRICE
2684/298	12/05/2023	WD	U	I	11	100
GRANTOR: SCHULTZ THEODORE J &						
GRANTEE: SCHULTZ FAMILY TRUS						
2563/1858	5/18/2022	WD	U	V	37	95,000
GRANTOR: GARBER VAN LAWRENCE &						
GRANTEE: SCHULTZ THEODORE J						

BUILDING NOTES

EXTRA FEATURES

L N	OB/XF CODE	DESCRIPTION	BLD	CAP	L	W	UNITS	UT	Adj R	ADJ UNIT PRICE	ORIG COND	YEAR ON	YEAR ACTUAL	Q	% COND	OB/XF MKT VALUE	NOTES
1	0811	CONCRETE B	0	100	0	0	2,082.00	SF	5.20	5.20	100	2006	2006	3	87	9,419	
2	0504	FP-ELECTRI	0	100	0	0	1.00	UT	2,000.00	2,000.00	100	2006	2006	3	90	1,800	
3	0810	CONCRETE A	0	100	14	8	112.00	SF	6.50	6.50	100	2016	2016	3	96	699	
4	0462	ST/AL FNC	0	100	120	0	480.00	SF	10.00	10.00	100	2016	2016	3	81	3,888	

BUILDING DIMENSIONS

BAS=[YR=2006;ORIG=-44,0] S43 E12 S2 E17 N2 E15 N33 W2 U3L3 W6 D3L3 W23 N10 W7 $
FUS=[YR=2006;ORIG=15,0] E12 S17 E17 N17 E15 S34 W15 N14 W8 S4 W9 S10 W12 N34 $
FGR=[YR=2006;ORIG=-29,0] N25 W25 S25 E10 E15 $
FOP=[YR=2006;ORIG=-44,43] W8 S9 E8 N2 E12 S2 E5 E12 N2 E15 S2 E8 N9 W23 S2 W17 N2 W12 $
FOP=[YR=2006;ORIG=0,0] W29 W8 S10 E23 U3R3 E6 D3R3 E2 N10 $
FGR=[YR=2016;ORIG=-29,-25] N12 W25 S12 E25 $
BAS=[YR=2024;ORIG=0,-15] W12 N20 E12 S20 $
BAS=[YR=2024;ORIG=-12,-35] N12 E12 S3 E3 S5 W3 S4 W12 $
BAL=[YR=2016;ORIG=3,-47] E7 S12 W3 W4 N12 $

LAND DESCRIPTION

TOTAL OB/XF 15,806

L N	USE CODE	CLS	LAND USE DESCRIPTION	CAP	R D	LOC ZONE	FRONT	DEPTH	TOT LND UTS	UNIT TYPE	D T	DPTH FACT	% COND	TOT ADJ	UNIT PRICE	ADJ UNIT PRICE	LAND VALUE	OTHER ADJUSTMENTS AND NOTES	YEAR	DENSITY	DECL	FRZ	YR	CONSRV
1	000133	C	SFR LAKE	100		PUD	0.00	0.00	1.00	LT		1.00	1.00	1.00	140,000.00	140,000.00	140,000							
2	000133	C	SFR LAKE	100		PUD	0.00	0.00	1.00	LT		1.00	1.00	1.00	140,000.00	140,000.00	140,000							

REVIEW DATE 07/30/2024 BY NW Total Acres: 0.00 Total Land Value: 280,000 Market: 0 Agricultural: 0 Common: 280,000 PRINTED 08/06/2024 BY SYS