LOT 5
IN OR 1878/94
THE COVE @ OYSTER BAY PB 6/79

MCFARLAND ROBERT JR & CYNTHIA L
96150 PARK PL
FERNANDINA BEACH, FL 32034

2024

46-3N-28-5065-0005-0000

NASSAU COUNTY PROPERTY

BUILDING CHARACTERISTICS

ELEMENT	CD	CONSTRUCTION
Exterior Wall	30	VINYL 100
Roof Structur	08	IRREGULAR 100
Roof Cover	13	STAND SEAM 100
Interior Wall	05	DRYWALL 100
Interior Floo	14	CARPET 60
Interior Floo	12	HARDWOOD 40
Air Condition	03	CENTRAL 100
Heating Type	04	AIR DUCTED 100
Bedrooms		3 100
Bathrooms		3 100
Frame	02	WOOD FRAME 100
Stories	2.	2. 100
Units		0 100
Occupancy	00	NONE 100
Quality	04	Quality Level 04
DOR CODE	0100	SINGLE FAMILY
MAP NUM		MKT AREA 04
NEIGHBORHOOD/LOC	4024.00	

AREA TYPE	TOTAL GROSS AREA	PCT OF BASE	TOT ADJ AREA	SUBAREA MARKET VALUE
BAL	105	15	16	2,605
BAS	1,322	100	1,322	215,278
FDG	484	60	290	47,225
FDG	220	60	132	21,495
FOP	72	30	22	3,583
FOP	105	30	32	5,211
FSP	366	40	146	23,775
FUS	874	100	874	142,325
TOTALS	3,548		2,834	461,495

MARKET ADJUSTMENTS

TYPE	MDL	EFF. AREA	TOT ADJ PTS	EFF. BASE RATE	REPL. COST NEW	AYB	EYB	ECON	FNCT		NORM	% COND
0500	01	2,834	120.9600	181.44	514,201	1998	2002	0	0	0	10.25	89.75

1 SFR CUST – 100% - 2017 Heated Area: 2196 HX Base Yr

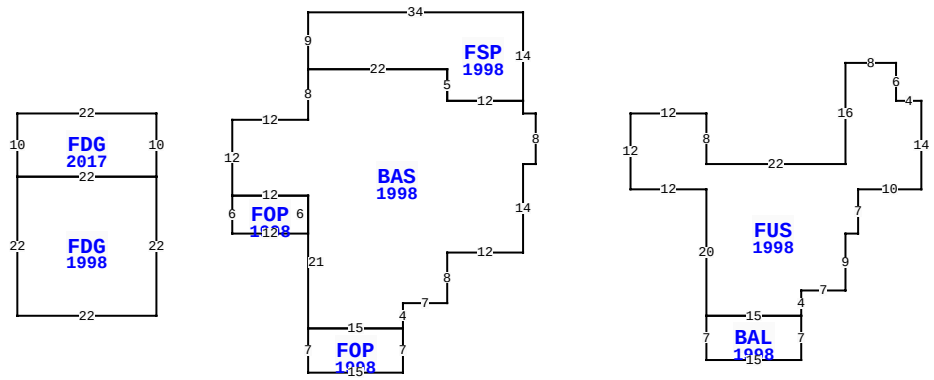

96150 PARK PL, FERNANDINA BEACH

BLD DATE		LGL DATE	
XF DATE		LAND DATE	04/04/2024 MLU
INC DATE		AG DATE	

VALUATION SUMMARY

VALUATION BY		STANDARD
Tax Group: 4	Tax Dist:	
BUILDING MARKET VALUE		461,495
TOTAL MARKET OB/XF VALUE		16,296
TOTAL LAND VALUE - MARKET		140,000
TOTAL MARKET VALUE		617,791
SOH/AGL Deduction		313,955
ASSESSED VALUE		303,836
TOTAL EXEMPTION VALUE	13	303,836
BASE TAXABLE VALUE		0
TOTAL JUST VALUE		617,791
NCON VALUE		0
INCOME VALUE		
PREVIOUS YEAR MKT VALUE		613,371

PERMIT NUM	DESCRIPTION	AMT	ISSUED
R1704693	REPAIR/RRF	0	10/01/2017
B177327	FGR ADDTN	10,235	08/14/2017
984898	NEW CONSTR	216,234	04/01/1998

SALES DATA

OFF RECORD Number	DATE	TYPE INST	Q / U	V / I	RSN CD	SALE PRICE
1878/0094	9/06/2013	WD	Q	I	01	253,000
GRANTOR: KANTNER KRISTEN LEIGH						
GRANTEE: MCFARLAND ROBERT I						
1225/1750	4/27/2004	WD	U	I	06	45,000
GRANTOR: CAIN ANNE M						
GRANTEE: KANTNER KRISTEN L						

BUILDING NOTES

BUILDING DIMENSIONS

BAS=[YR=1998] W2 N2 FSP=[YR=1998] N14 W34 S9 E22 S5 E12 $ W12 N5 W22 S8 W12 S12 FOP=[YR=1998] S6 E12 N6 W12 $ E12 S21 FOP=[YR=1998] S7 E15 N7 W15 $ E15 N4 E7 N8 E12 N14 E2 N8 $ PTR= E15 FUS=[YR=1998] E12 S8 E22 N16 E8 S6 E4 S14 W10 S7 W2 S9 W7 S4 BAL=[YR=1998] S7 W15 N7 E15 $ W15 N20 W12 N12 $ W15 $ PTR= W60 FDG=[YR=2017] W22 S10 FDG=[YR=1998] S22 E22 N22 W22$ E22 N10$ E60 $.

EXTRA FEATURES

LN	OB/XF CODE	DESCRIPTION	BLD	CAP	L	W	UNITS	UT	Adj R	ADJ UNIT PRICE	ORIG COND	YEAR ON	YEAR ACTUAL	Q	% COND	OB/XF MKT VALUE	NOTES
1	0500	FP-PRE FAB	0	100	0	0	1.00	UT	3,500.00	3,500.00	100	1998	1998	3	81	2,835	
2	0810	CONCRETE A	0	100	38	4	152.00	SF	6.50	6.50	100	1998	1998	3	75	741	
3	0810	CONCRETE A	0	100	0	0	902.00	SF	6.50	6.50	100	1998	1998	3	75	4,397	
4	0855	CONC PAVER	0	100	0	0	858.00	SF	10.00	10.00	100	2017	2017	3	97	8,323	

LAND DESCRIPTION

TOTAL OB/XF 16,296

LN	USE CODE	CLS	LAND USE DESCRIPTION	CAP	RD	LOC ZONE	FRONT	DEPTH	TOT LND UTS	UNIT TYPE	DT	DPTH FACT	% COND	TOT ADJ	UNIT PRICE	ADJ UNIT PRICE	LAND VALUE	OTHER ADJUSTMENTS AND NOTES	YEAR	DENSITY	DECL	FRZ	YR	CONSRV
1	000133	C	SFR LAKE	100		PUD	0.00	0.00	1.00	LT		1.00	1.00	1.00	140,000.00	140,000.00	140,000							

REVIEW DATE 05/12/2019 BY KBA Total Acres: 0.00 Total Land Value: 140,000 Market: 0 Agricultural: 0 Common: 140,000 PRINTED 08/06/2024 BY SYS