LOT 6
BARNWELL PLANTATION PB 5/34

4-Y PROPERTIES LLC
96203 MARSH HEN RD
FERNANDINA BEACH, FL 32034

2024

46-3N-28-5055-0006-0000

BUILDING CHARACTERISTICS

ELEMENT	CD	CONSTRUCTION
Exterior Wall	12	CEDAR 100
Roof Structur	08	IRREGULAR 100
Roof Cover	03	COMP SHNGL 100
Interior Wall	05	DRYWALL 100
Interior Floo	03	CONC FINSH 90
Interior Floo	12	HARDWOOD 10
Air Condition	03	CENTRAL 100
Heating Type	04	AIR DUCTED 100
Bedrooms		4 100
Bathrooms		3.5 100
Frame	02	WOOD FRAME 100
Stories	1.	1. 100
Units		0 100
BUD8 Adjustme	04	DIST 01 100
Occupancy	00	NONE 100
Quality	03	Quality Level 03
DOR CODE	0100	SINGLE FAMILY
MAP NUM		MKT AREA 04
NEIGHBORHOOD/LOC	4020.00	

AREA TYPE	TOTAL GROSS AREA	PCT OF BASE	TOT ADJ AREA	SUBAREA MARKET VALUE
BAS	3,958	100	3,958	563,151
BAS	180	100	180	25,611
BAS	210	100	210	29,879
BAS	312	100	312	44,392
FCB	512	30	154	21,912
FGR	600	55	330	46,953
FGR	264	55	145	20,631
TOTALS	6,036		5,289	752,527

MARKET ADJUSTMENTS

TYPE	MDL	EFF. AREA	TOT ADJ PTS	EFF. BASE RATE	REPL. COST NEW	AYB	EYB	ECON	FNCT		NORM	% COND
0500	01	5,289	99.8450	149.77	792,134	1988	2013	0	0	0	5.00	95.00

1 SFR CUST – 0% - 0 Heated Area: 4814 HX Base Yr

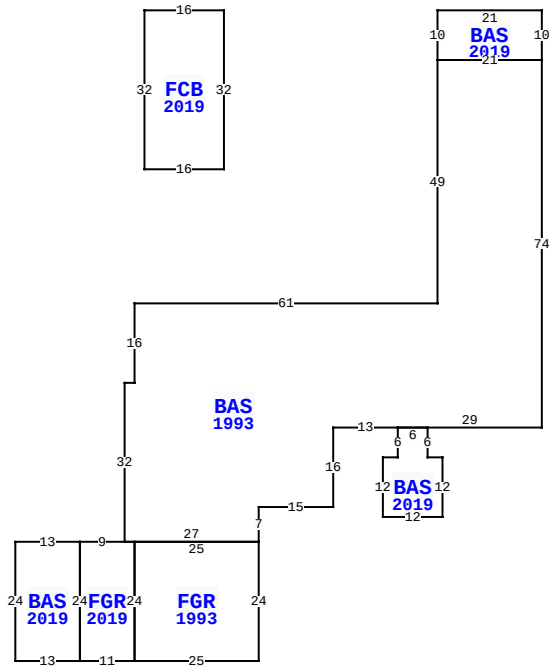

96203 MARSH HEN RD, FERNANDINA BEACH

BLD DATE		LGL DATE	
XF DATE		LAND DATE	06/06/2023 MLU
INC DATE		AG DATE	

NASSAU COUNTY PROPERTY

PAGE 1 of 2 4

VALUATION SUMMARY

VALUATION BY	STANDARD
Tax Group: 4	Tax Dist:
BUILDING MARKET VALUE	803,424
TOTAL MARKET OB/XF VALUE	339,269
TOTAL LAND VALUE - MARKET	476,800
TOTAL MARKET VALUE	1,619,493
SOH/AGL Deduction	176,216
ASSESSED VALUE	1,443,277
TOTAL EXEMPTION VALUE	0
BASE TAXABLE VALUE	1,443,277
TOTAL JUST VALUE	1,619,493
NCON VALUE	0
INCOME VALUE	
PREVIOUS YEAR MKT VALUE	1,603,034

PERMIT NUM	DESCRIPTION	AMT	ISSUED
19012860	GARAGE	62,693	12/18/2019
B1704094	SOLAR PV	28,599	07/01/2017
B1701525	SWIM POOL	42,500	03/01/2017
B1700075	ADDITION	125,399	01/11/2017
2416	H/AC	4,000	01/07/1988
4967	NEW CONSTR	4,000	01/07/1988

SALES DATA

OFF RECORD Number	DATE	TYPE INST	Q U	V I	RSN CD	SALE PRICE
2033/1048	3/04/2016	WD	Q	I	05	610,000

GRANTOR: FELIX NANCY A &

GRANTEE: 4-Y PROPERTIES LLC

BUILDING NOTES

BUILDING DIMENSIONS

BAS=[YR=2019] W21 S10 BAS=[YR=1993] S49 W61 S16 W2 S32
FGR=[YR=2019] W9 BAS=[YR=2019] W13 S24 E13 N24$ S24 E11
FGR=[YR=1993] E25 N24 W25 S24$ N24 W2$ E27 N7 E15 N16 E13
BAS=[YR=2019] S6 W3 S12 E12 N12 W3 N6 W6$ E29 N74 W21$ E21
N10$ PTR= W64 FCB=[YR=2019] W16 S32 E16 N32$ E64$.

EXTRA FEATURES

LN	OB/XF CODE	DESCRIPTION	BLD	CAP	L	W	UNITS	UT	Adj R	ADJ UNIT PRICE	ORIG COND	YEAR ON	YEAR ACTUAL	Q	% COND	OB/XF MKT VALUE	NOTES
1	0504	FP-ELECTRI	0	0	0	0	1.00	UT	2,000.00	2,000.00	100	1988	1988	3	64	1,280	
2	0940	SHEDS/PORT	0	0	10	12	120.00	SF	30.00	30.00	100	1985	1985	3	20	720	
3	0920	CWALL-WD/M	0	0	0	0	450.00	LF	390.00	390.00	100	2018	2018	3	82	143,910	
4	0857	SANDSTONE/	0	0	62	2	124.00	SF	16.00	16.00	100	2019	2019	3	99	1,964	
5	0861	POOL GUNIT	0	0	0	0	792.00	SF	85.00	85.00	100	2019	2019	3	90	60,588	
6	0871	POOL HTR R	0	0	0	0	1.00	UT	2,000.00	2,000.00	100	2019	2019	3	86	1,720	
7	0857	SANDSTONE/	0	0	0	0	2,775.00	SF	16.00	16.00	100	2019	2019	3	99	43,956	
8	0600	SUMMER KIT	0	0	0	0	1.00	UT	20,000.00	20,000.00	100	2019	2019	3	86	17,200	
9	0500	FP-PRE FAB	0	0	0	0	1.00	UT	3,500.00	3,500.00	100	2019	2019	3	99	3,465	
10	0300	BOAT DCK W	0	0	0	0	1,140.00	SF	40.00	40.00	100	2022	2022	3	98	44,688	

TOTAL OB/XF 319,491

LAND DESCRIPTION

LN	USE CODE	CLS	LAND USE DESCRIPTION	CAP	RD	LOC ZONE	FRONT	DEPTH	TOT LND UTS	UNIT TYPE	DT	DPTH FACT	% COND	TOT ADJ	UNIT PRICE	ADJ UNIT PRICE	LAND VALUE	OTHER ADJUSTMENTS AND NOTES	YEAR	DENSITY	DECL	FRZ	YR	CONSRV
1	000116	C	SFR MARSH	0		RSF-	1298.00	328.00	298.00	FF		1.00	1.00	0.80	2,000.00	1,600.00	476,800							

REVIEW DATE 09/14/2022 BY DJ Total Acres: 0.00 Total Land Value: 476,800 Market: 0 Agricultural: 0 Common: 476,800 PRINTED 08/06/2024 BY SYS

LOT 6
BARNWELL PLANTATION PB 5/34

4-Y PROPERTIES LLC
96203 MARSH HEN RD
FERNANDINA BEACH, FL 32034

2024

46-3N-28-5055-0006-0000

NASSAU COUNTY PROPERTY

BUILDING CHARACTERISTICS

ELEMENT	CD	CONSTRUCTION
Exterior Wall	12	CEDAR 100
Roof Structur	03	GABLE/HIP 100
Roof Cover	03	COMP SHNGL 100
Interior Wall	05	DRYWALL 100
Interior Floo	03	CONC FINSH 100
Air Condition	03	CENTRAL 100
Heating Type	04	AIR DUCTED 100
Bedrooms		0 100
Bathrooms		0.5 100
Frame	02	WOOD FRAME 100
Stories	1.	1. 100
Units		0 100
Occupancy	00	NONE 100
Quality	05	Quality Level 05

DOR CODE 0100 SINGLE FAMILY
MAP NUM | MKT AREA 04
NEIGHBORHOOD/LOC 4020.00

AREA TYPE	TOTAL GROSS AREA	PCT OF BASE	TOT ADJ AREA	SUBAREA MARKET VALUE
AOF	650	110	715	26,660
BAS	650	100	650	24,236
TOTALS	1,300		1,365	50,897

MARKET ADJUSTMENTS

TYPE	MDL	EFF. AREA	TOT ADJ PTS	EFF. BASE RATE	REPL. COST NEW	AYB	EYB	ECON	FNCT		NORM	% COND
6500	01	1,365	109.8240	38.44	52,471	2020	2020	0	0	0	3.00	97.00

2 GARAGE RES – 0% - 0 Heated Area: 1300 HX Base Yr

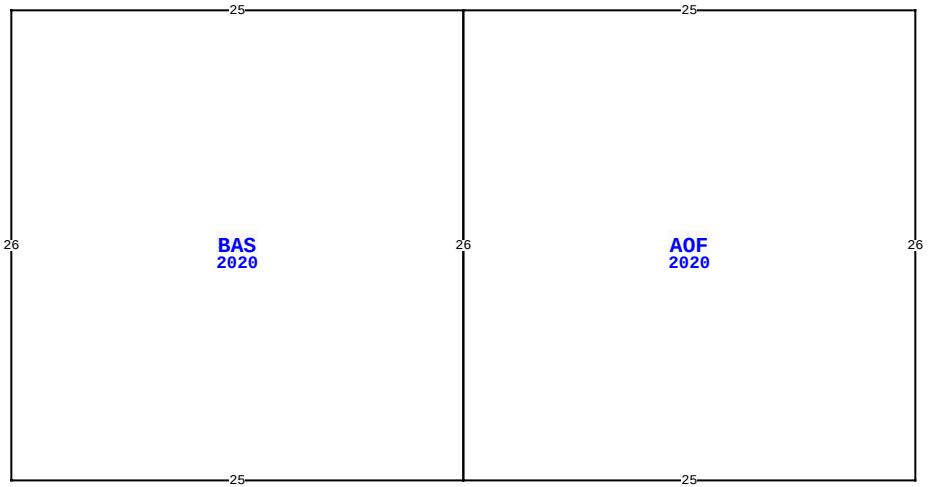

96203 MARSH HEN RD, FERNANDINA BEACH

BLD DATE		LGL DATE	
XF DATE		LAND DATE	06/06/2023 MLU
INC DATE		AG DATE	

VALUATION SUMMARY

VALUATION BY	STANDARD
Tax Group: 4	Tax Dist:
BUILDING MARKET VALUE	803,424
TOTAL MARKET OB/XF VALUE	339,269
TOTAL LAND VALUE - MARKET	476,800
TOTAL MARKET VALUE	1,619,493
SOH/AGL Deduction	176,216
ASSESSED VALUE	1,443,277
TOTAL EXEMPTION VALUE	0
BASE TAXABLE VALUE	1,443,277
TOTAL JUST VALUE	1,619,493
NCON VALUE	0
INCOME VALUE	
PREVIOUS YEAR MKT VALUE	1,603,034

PERMIT NUM	DESCRIPTION	AMT	ISSUED
4490	NEW CONSTR	105,199	11/09/1987

SALES DATA

OFF RECORD Number	DATE	TYPE INST	Q / U	V / I	RSN CD	SALE PRICE
2033/1048	3/04/2016	WD	Q	I	05	610,000

GRANTOR: FELIX NANCY A &
GRANTEE: 4-Y PROPERTIES LLC

BUILDING NOTES

BUILDING DIMENSIONS

AOF=[YR=2020] W25 BAS=[YR=2020] W25 S26 E25 N26$ S26 E25 N26$.

EXTRA FEATURES

L N	OB/XF CODE	DESCRIPTION	BLD	CAP	L	W	UNITS	UT	Adj R	ADJ UNIT PRICE	ORIG COND	YEAR ON	YEAR ACTUAL	Q	% COND	OB/XF MKT VALUE	NOTES
11	0303	FLT DOCK W	0	0	8	20	160.00	SF	26.00	26.00	100	2022	2022	3	98	4,077	
12	0310	AL GANG WY	0	0	0	0	20.00	LF	115.00	115.00	100	2022	2022	3	97	2,231	
13	0317	DCK PLNG W	0	0	0	0	6.00	UT	1,000.00	1,000.00	100	2022	2022	3	97	5,820	
14	0811	CONCRETE B	0	0	0	0	1,486.00	SF	5.20	5.20	100	2021	2021	3	99	7,650	

LAND DESCRIPTION

TOTAL OB/XF 19,778

L N	USE CODE	CLS	LAND USE DESCRIPTION	CAP	R D	LOC ZONE	FRONT	DEPTH	TOT LND UTS	UNIT TYPE	D T	DPTH FACT	% COND	TOT ADJ	UNIT PRICE	ADJ UNIT PRICE	LAND VALUE	OTHER ADJUSTMENTS AND NOTES	YEAR	DENSITY	DECL	FRZ	YR	CONSRV

REVIEW DATE 09/14/2022 BY DJ Total Acres: 0.00 Total Land Value: 476,800 Market: 0 Agricultural: 0 Common: 476,800 PRINTED 08/06/2024 BY SYS