IN OR 2619/1697 (EX 2-10)
EX R/W OR 479/544

PLEWS DAVID F & DEBORAH F
95451 BARNWELL RD
FERNANDINA BEACH, FL 32034

2024

46-3N-28-0000-0002-0030

BUILDING CHARACTERISTICS

ELEMENT	CD	CONSTRUCTION
Exterior Wall	16	WD FR STUC 100
Roof Structur	08	IRREGULAR 100
Roof Cover	03	COMP SHNGL 100
Interior Wall	05	DRYWALL 100
Interior Floo	12	HARDWOOD 50
Interior Floo	14	CARPET 50
Air Condition	03	CENTRAL 100
Heating Type	04	AIR DUCTED 100
Bedrooms		3 100
Bathrooms		2.5 100
Frame	02	WOOD FRAME 100
Stories	2.	2. 100
Units		0 100
Occupancy	00	NONE 100
Quality	04	Quality Level 04
DOR CODE	0100	SINGLE FAMILY
MAP NUM		MKT AREA 04
NEIGHBORHOOD/LOC	4020.00	

AREA TYPE	TOTAL GROSS AREA	PCT OF BASE	TOT ADJ AREA	SUBAREA MARKET VALUE
BAS	2,112	100	2,112	229,710
DCK	380	10	38	4,133
DCK	28	10	3	326
FGR	624	55	343	37,306
FOP	170	30	51	5,547
FOP	342	30	103	11,202
FSP	325	40	130	14,139
FUS	824	100	824	89,621
FUS	468	100	468	50,902
STR	80	10	8	870
TOTALS	5,353		4,080	443,758

MARKET ADJUSTMENTS

TYPE	MDL	EFF. AREA	TOT ADJ PTS	EFF. BASE RATE	REPL. COST NEW	AYB	EYB	ECON	FNCT		NORM	% COND
0900	01	4,080	101.1780	126.47	515,998	1995	1995	0	0	0	14.00	86.00

1 SNGL FAM – 100% - 2013 Heated Area: 3404 HX Base Yr 2013

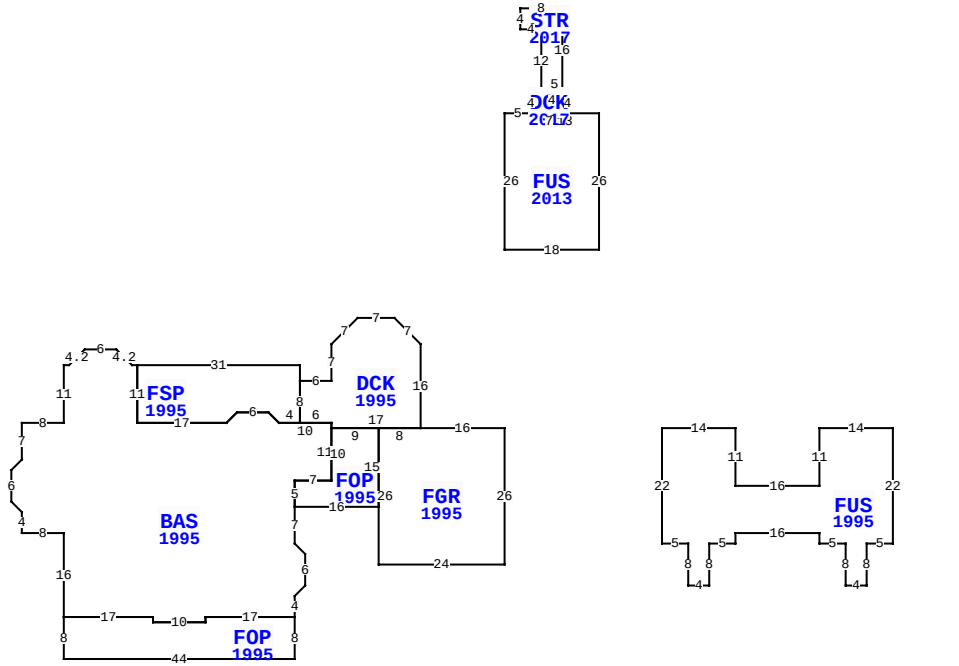

95451 BARNWELL RD, FERNANDINA BEACH

BLD DATE	03/03/2023 NW	LGL DATE	
XF DATE		LAND DATE	06/05/2023 MLU
INC DATE		AG DATE	

EXTRA FEATURES

L N	OB/XF CODE	DESCRIPTION	BLD	CAP	L	W	UNITS	UT	Adj R	ADJ UNIT PRICE	ORIG COND	YEAR ON	YEAR ACTUAL	Q	% COND	OB/XF MKT VALUE	NOTES
1	0504	FP-ELECTRI	0	100	0	0	1.00	UT	2,000.00	2,000.00	100	1995	1995	3	77	1,540	
2	0812	CONCRETE C	0	100	0	0	1,442.00	SF	4.00	4.00	100	1995	1995	3	70	4,038	
3	0300	BOAT DCK W	0	100	0	0	480.00	SF	40.00	40.00	100	1996	1996	3	24	4,608	
4	0803	ASPHALT C	0	100	0	0	972.00	SF	2.00	2.00	100	2010	2010	3	66	1,283	
5	0861	POOL GUNIT	0	100	0	0	420.00	SF	85.00	85.00	100	2013	2013	3	71	25,347	
6	0855	CONC PAVER	0	100	0	0	652.00	SF	10.00	10.00	100	2013	2013	3	94	6,129	
7	0940	SHEDS/PORT	0	100	16	20	320.00	SF	21.00	21.00	100	2017	2017	3	78	5,242	

NASSAU COUNTY PROPERTY

PAGE 1 of 1 4

VALUATION SUMMARY

VALUATION BY		STANDARD
Tax Group: 4	Tax Dist:	
BUILDING MARKET VALUE		443,758
TOTAL MARKET OB/XF VALUE		48,187
TOTAL LAND VALUE - MARKET		296,000
TOTAL MARKET VALUE		787,945
SOH/AGL Deduction		360,972
ASSESSED VALUE		426,973
TOTAL EXEMPTION VALUE	HX HB	50,000
BASE TAXABLE VALUE		376,973
TOTAL JUST VALUE		787,945
NCON VALUE		0
INCOME VALUE		
PREVIOUS YEAR MKT VALUE		715,194

PERMIT NUM	DESCRIPTION	AMT	ISSUED
B1705407	GARAGE	14,428	09/01/2017
B1327629	SWIM POOL	29,375	08/01/2013
9401515	NEW CONSTR	126,400	12/01/1994

SALES DATA

OFF RECORD Number	DATE	TYPE INST	Q / U	V / I	RSN CD	SALE PRICE
2619/1697	1/28/2023	QC	U	I	11	100
GRANTOR: PLEWS DAVID F & DEBOR						
GRANTEE: PLEWS DEBORAH F & D						
2323/0903	12/06/2019	WD	U	I	11	100
GRANTOR: PLEWS DAVID F & DEBOR						
GRANTEE: PLEWS KRISTIN & KAY						

BUILDING NOTES

BUILDING DIMENSIONS

FGR=[YR=1995] W16 DCK=[YR=1995] N16 U5 L5 W7 D5 L5 S7 W6 FSP=[YR=1995] N3 W31 BAS=[YR=1995] W1 U3 L3 W6 D3 L3 W1 S11 W8 S7 D2 L2 S6 D2 R2 S4 E8 S16 FOP=[YR=1995] S8 E44 N8 W17 S1 W10 N1 W17 $ E17 S1 E10 N1 E17 N4 U2 R2 N6 U2 L2 N7 FOP=[YR=1995] E16 N15 W9 S10 W7 S5 $ N5 E7 N11 W10 U2 L2 W6 D2 L2 W17 N11 $ S11 E17 U2 R2 E6 D2 R2 E4 N8 $ S8 E6 S1 E17 $ W8 S26 E24 N26 $ PTR= E30 FUS=[YR=1995] E14 S11 E16 N11 E14 S22 W5 S8 W4 N8 W5 N2 W16 S2 W5 S8 W4 N8 W5 N22 $ W30 PTR= N60 FUS=[YR=2013] E5 DCK=[YR=2017] N4 E2 STR=[YR=2017] N12 W4 N4 E8 S16 W4$ E5 S4 W7$ E13 S26 W18 N26 $ S60 $.

LAND DESCRIPTION

TOTAL OB/XF 48,187

L N	USE CODE	CLS	LAND USE DESCRIPTION	CAP	R D	LOC ZONE	FRONT	DEPTH	TOT LND UTS	UNIT TYPE	D T	DPTH FACT	% COND	TOT ADJ	UNIT PRICE	ADJ UNIT PRICE	LAND VALUE	OTHER ADJUSTMENTS AND NOTES	YEAR	DENSITY	DECL	FRZ	YR	CONSRV
1	000130	C	SFR WATER	100		RSF-	1155.00	404.00	1.85	AC		1.00	1.00	1.00	160,000.00	160,000.00	296,000							

REVIEW DATE 05/12/2019 BY KBA Total Acres: 1.85 Total Land Value: 296,000 Market: 0 Agricultural: 0 Common: 296,000 PRINTED 08/06/2024 BY SYS