BLOCK 14 LOT 35
IN OR 1051/1302
SPRING LAKE EST 4 REPLAT

VEAL ROBERT C & MARSHA B
P O BOX 2131
CALLAHAN, FL 32011-2131

2024

46-2N-25-197D-0014-0350

NASSAU COUNTY PROPERTY

BUILDING CHARACTERISTICS

ELEMENT	CD	CONSTRUCTION
Exterior Wall	20	FACE BRICK 100
Roof Structur	03	GABLE/HIP 100
Roof Cover	03	COMP SHNGL 100
Interior Wall	05	DRYWALL 100
Interior Floo	14	CARPET 60
Interior Floo	11	CLAY TILE 40
Air Condition	03	CENTRAL 100
Heating Type	04	AIR DUCTED 100
Bedrooms		4 100
Bathrooms		2.5 100
Frame	02	WOOD FRAME 100
Stories	1.	1. 100
Units		0 100
Occupancy	00	NONE 100
Quality	03	Quality Level 03
DOR CODE	0100	SINGLE FAMILY
MAP NUM		MKT AREA 08
NEIGHBORHOOD/LOC	8010.00	

AREA TYPE	TOTAL GROSS AREA	PCT OF BASE	TOT ADJ AREA	SUBAREA MARKET VALUE
BAS	1,901	100	1,901	220,629
FGR	663	55	365	42,361
FOP	246	30	74	8,588
FOP	318	30	95	11,025
PTO	96	5	5	581
UDG	1,015	55	558	64,761
TOTALS	4,239		2,998	347,945

MARKET ADJUSTMENTS

TYPE	MDL	EFF. AREA	TOT ADJ PTS	EFF. BASE RATE	REPL. COST NEW	AYB	EYB	ECON	FNCT		NORM	% COND
0900	01	2,998	109.2280	136.54	409,347	2003	2003	0	0	0	15.00	85.00

1 SNGL FAM – 100% - 2004 Heated Area: 1901 HX Base Yr 2004

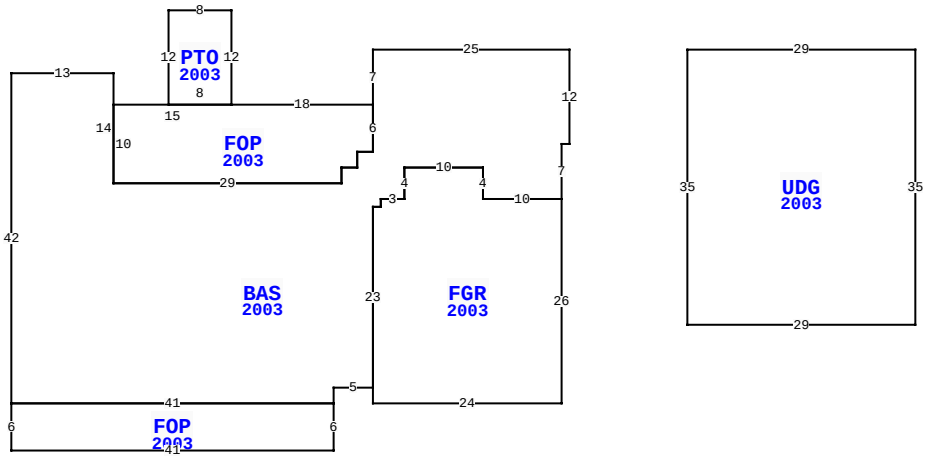

55460 BEAR RUN RD, CALLAHAN

BLD DATE		LGL DATE	
XF DATE		LAND DATE	04/04/2024 MLU
INC DATE		AG DATE	

VALUATION SUMMARY

VALUATION BY		STANDARD
Tax Group: 6	Tax Dist:	
BUILDING MARKET VALUE		347,945
TOTAL MARKET OB/XF VALUE		8,904
TOTAL LAND VALUE - MARKET		55,000
TOTAL MARKET VALUE		411,849
SOH/AGL Deduction		222,948
ASSESSED VALUE		188,901
TOTAL EXEMPTION VALUE	HX HB	50,000
BASE TAXABLE VALUE		138,901
TOTAL JUST VALUE		411,849
NCON VALUE		0
INCOME VALUE		
PREVIOUS YEAR MKT VALUE		392,469

PERMIT NUM	DESCRIPTION	AMT	ISSUED
R4853	REPAIR/RRF	1,000	03/01/2003
E10629	NEW CONSTR	2,000	01/02/2003
B10580	NEW CONSTR	146,781	12/01/2002
R4645	REPAIR/RRF	4,000	12/01/2002

SALES DATA

OFF RECORD Number	DATE	TYPE INST	Q U	V I	RSN CD	SALE PRICE
1051/1302	4/24/2002	WD	Q	V		28,700
GRANTOR: BKS INC						
GRANTEE: VEAL ROBERT & MARSH						
0929/0852	4/24/2000	WD	U	V	09	1,546,300
GRANTOR: SPRING LAKE ESTATES O						
GRANTEE: BKS INC						

BUILDING NOTES

BUILDING DIMENSIONS

BAS=[YR=2003] W25 S7 FOP=[YR=2003] W18 PTO=[YR=2003] N12 W8 S12 E8 $ W15 S10 E29 N2 E2 N2 E2 N6 $ S6 W2 S2 W2 S2 W29 N14 W13 S42 FOP=[YR=2003] S6 E41 N6 W41 $ E41 N2 E5 FGR=[YR=2003] S2 E24 N26 W10 N4 W10 S4 W3 S1 W1 S23 $ N23 E1 N1 E3 N4 E10 S4 E10 N7 E1 N12 $ PTR= E15 UDG=[YR=2003] E29 S35 W29 N35 $ W15 $.

EXTRA FEATURES

LN	OB/XF CODE	DESCRIPTION	BLD	CAP	L	W	UNITS	UT	Adj R	ADJ UNIT PRICE	ORIG COND	YEAR ON	YEAR ACTUAL	Q	% COND	OB/XF MKT VALUE	NOTES
1	0812	CONCRETE C	0	100	0	0	2,682.00	SF	4.00	4.00	100	2003	2003	3	83	8,904	

LAND DESCRIPTION

TOTAL OB/XF 8,904

LN	USE CODE	CLS	LAND USE DESCRIPTION	CAP	RD	LOC ZONE	FRONT	DEPTH	TOT LND UTS	UNIT TYPE	DT	DPTH FACT	% COND	TOT ADJ	UNIT PRICE	ADJ UNIT PRICE	LAND VALUE	OTHER ADJUSTMENTS AND NOTES	YEAR	DENSITY	DECL	FRZ	YR	CONSRV
1	000100	C	SFR	100	0006	RSF-1	0.00	0.00	1.00	LT		1.00	1.00	1.00	55,000.00	55,000.00	55,000							

REVIEW DATE 05/18/2020 BY KBA Total Acres: 0.00 Total Land Value: 55,000 Market: 0 Agricultural: 0 Common: 55,000 PRINTED 08/06/2024 BY SYS