BLOCK 13 LOT 25
IN OR 1916/1908
CONSERV ESMT PT OR 929/824

LOUESE FRED C & SANDRA G
55204 LITTLE BROOK DRIVE
CALLAHAN, FL 32011

2024

46-2N-25-197D-0013-0250

NASSAU COUNTY PROPERTY

BUILDING CHARACTERISTICS

ELEMENT	CD	CONSTRUCTION
Exterior Wall	16	WD FR STUC 50
Exterior Wall	17	CB STUCCO 50
Roof Structur	03	GABLE/HIP 100
Roof Cover	03	COMP SHNGL 100
Interior Wall	05	DRYWALL 100
Interior Floo	14	CARPET 80
Interior Floo	08	SHT VINYL 20
Air Condition	03	CENTRAL 100
Heating Type	04	AIR DUCTED 100
Bedrooms		4 100
Bathrooms		2.5 100
Frame	02	WOOD FRAME 100
Stories	2.	2. 100
Units		0 100
Occupancy	00	NONE 100
Quality	03	Quality Level 03
DOR CODE	0100	SINGLE FAMILY
MAP NUM		MKT AREA 08
NEIGHBORHOOD/LOC	8010.00	

AREA TYPE	TOTAL GROSS AREA	PCT OF BASE	TOT ADJ AREA	SUBAREA MARKET VALUE
BAS	1,364	100	1,364	153,896
FGR	396	55	218	24,597
FOP	16	30	5	565
FUS	1,616	100	1,616	182,329
USP	300	30	90	10,155
TOTALS	3,692		3,293	371,542

MARKET ADJUSTMENTS

TYPE	MDL	EFF. AREA	TOT ADJ PTS	EFF. BASE RATE	REPL. COST NEW	AYB	EYB	ECON	FNCT		NORM	% COND
0900	01	3,293	97.0600	121.32	399,507	2004	2009	0	0	0	7.00	93.00

1 SNGL FAM – 100% - 2015 Heated Area: 2980 HX Base Yr 2015

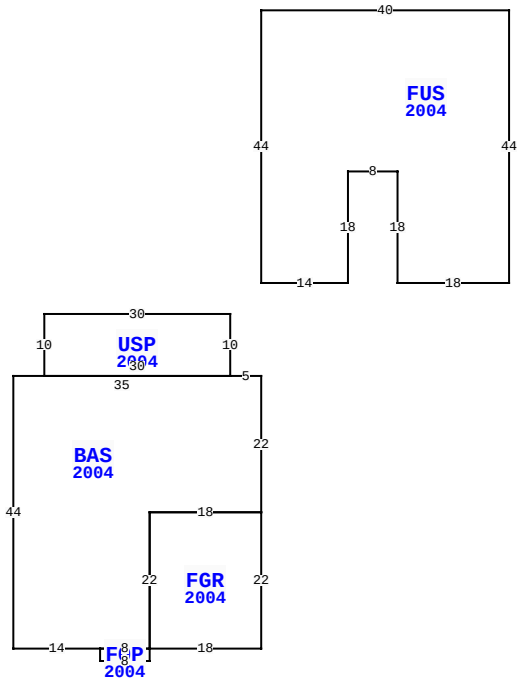

55204 LITTLE BROOK DR, CALLAHAN

BLD DATE		LGL DATE	
XF DATE		LAND DATE	04/04/2024 MLU
INC DATE		AG DATE	

VALUATION SUMMARY

VALUATION BY		STANDARD
Tax Group: 6	Tax Dist:	
BUILDING MARKET VALUE		371,542
TOTAL MARKET OB/XF VALUE		35,095
TOTAL LAND VALUE - MARKET		55,000
TOTAL MARKET VALUE		461,637
SOH/AGL Deduction		226,950
ASSESSED VALUE		234,687
TOTAL EXEMPTION VALUE	HX HB VX	55,000
BASE TAXABLE VALUE		179,687
TOTAL JUST VALUE		461,637
NCON VALUE		0
INCOME VALUE		
PREVIOUS YEAR MKT VALUE		441,068

PERMIT NUM	DESCRIPTION	AMT	ISSUED
19004200	REPAIR/RRF	4,355	05/01/2019
B1429167	SWIM POOL	31,709	08/01/2014
B12095	XFOB	3,000	12/01/2003
R5529	REPAIR/RRF	0	11/21/2003
B11842	NEW CONSTR	212,586	10/21/2003

SALES DATA

OFF RECORD Number	DATE	TYPE INST	Q / U	V / I	RSN CD	SALE PRICE
1916/1908	5/13/2014	WD	Q	I	01	223,000
GRANTOR: HILLS LAWRENCE M JR &						
GRANTEE: LOUESE FRED C & SAN						
1221/1317	4/12/2004	WD	Q	I		182,500
GRANTOR: MARONDA HOMES INC						
GRANTEE: HILLS LAWRENCE JR &						

BUILDING NOTES

BUILDING DIMENSIONS

BAS=[YR=2004] W5 USP=[YR=2004] N10 W30 S10 E30$ W35 S44 E14 FOP=[YR=2004] S2 E8 N2 W8$ E8 FGR=[YR=2004] E18 N22 W18 S22$ N22 E18 N22$ PTR=N15 FUS=[YR=2004] N44 E40 S44 W18 N18 W8 S18 W14$ S15$.

EXTRA FEATURES

LN	OB/XF CODE	DESCRIPTION	BLD	CAP	L	W	UNITS	UT	Adj R	ADJ UNIT PRICE	ORIG COND	YEAR ON	YEAR ACTUAL	Q	% COND	OB/XF MKT VALUE	NOTES
1	0812	CONCRETE C	0	100	0	0	1,189.00	SF	4.00	4.00	100	2004	2004	3	84	3,995	
2	0810	CONCRETE A	0	100	0	0	150.00	SF	6.50	6.50	100	2014	2014	3	95	926	
3	0861	POOL GUNIT	0	100	0	0	312.00	SF	85.00	85.00	100	2014	2014	3	75	19,890	
4	0855	CONC PAVER	0	100	0	0	552.00	SF	10.00	10.00	100	2014	2014	3	95	5,244	
5	0462	ST/AL FNC	0	100	0	0	672.00	SF	10.00	10.00	100	2014	2014	3	75	5,040	

LAND DESCRIPTION

TOTAL OB/XF 35,095

LN	USE CODE	CLS	LAND USE DESCRIPTION	CAP	RD	LOC ZONE	FRONT	DEPTH	TOT LND UTS	UNIT TYPE	DT	DPTH FACT	% COND	TOT ADJ	UNIT PRICE	ADJ UNIT PRICE	LAND VALUE	OTHER ADJUSTMENTS AND NOTES	YEAR	DENSITY	DECL	FRZ	YR	CONSRV
1	000100	C	SFR	100		RSF-1	0.00	0.00	1.00	LT		1.00	1.00	1.00	55,000.00	55,000.00	55,000							

REVIEW DATE 10/25/2019 BY KB Total Acres: 0.00 Total Land Value: 55,000 Market: 0 Agricultural: 0 Common: 55,000 PRINTED 08/06/2024 BY SYS