BLOCK 13 LOT 21
CONSERV ESMT PT OR 929/824
SPRING LAKE EST 4 REPLAT

SIMS DUSTIN J & GRISELDA
55296 LITTLE BROOK DRIVE
CALLAHAN, FL 32011

2024

46-2N-25-197D-0013-0210

NASSAU COUNTY PROPERTY

BUILDING CHARACTERISTICS

ELEMENT	CD	CONSTRUCTION
Exterior Wall	16	WD FR STUC 50
Exterior Wall	17	CB STUCCO 50
Roof Structur	03	GABLE/HIP 100
Roof Cover	03	COMP SHNGL 100
Interior Wall	05	DRYWALL 100
Interior Floo	14	CARPET 70
Interior Floo	11	CLAY TILE 30
Air Condition	03	CENTRAL 100
Heating Type	04	AIR DUCTED 100
Bedrooms		4 100
Bathrooms		2.5 100
Frame	02	WOOD FRAME 100
Stories	2.	2. 100
Units		0 100
Occupancy	00	NONE 100
Quality	03	Quality Level 03
DOR CODE	0100	SINGLE FAMILY
MAP NUM		MKT AREA 08
NEIGHBORHOOD/LOC	8010.00	

AREA TYPE	TOTAL GROSS AREA	PCT OF BASE	TOT ADJ AREA	SUBAREA MARKET VALUE
BAS	1,230	100	1,230	141,326
FEP	280	80	224	25,737
FGR	600	55	330	37,917
FOP	18	30	5	575
FUS	1,613	100	1,613	185,331
PTO	220	5	11	1,264
TOTALS	3,961		3,413	392,149

MARKET ADJUSTMENTS

TYPE	MDL	EFF. AREA	TOT ADJ PTS	EFF. BASE RATE	REPL. COST NEW	AYB	EYB	ECON	FNCT		NORM	% COND
0900	01	3,413	101.5680	126.96	433,314	2004	2004	0	0	0	9.50	90.50

1 SNGL FAM – 100% - 2024 Heated Area: 2843 HX Base Yr

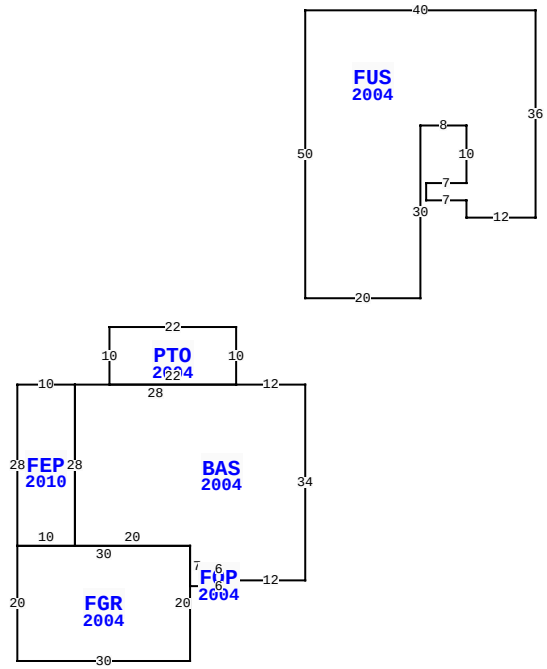

55296 LITTLE BROOK DR, CALLAHAN

BLD DATE		LGL DATE	
XF DATE		LAND DATE	04/04/2024 MLU
INC DATE		AG DATE	

VALUATION SUMMARY

VALUATION BY		STANDARD
Tax Group: 6	Tax Dist:	
BUILDING MARKET VALUE		392,149
TOTAL MARKET OB/XF VALUE		19,966
TOTAL LAND VALUE - MARKET		55,000
TOTAL MARKET VALUE		467,115
SOH/AGL Deduction		0
ASSESSED VALUE		467,115
TOTAL EXEMPTION VALUE	13	467,115
BASE TAXABLE VALUE		0
TOTAL JUST VALUE		467,115
NCON VALUE		0
INCOME VALUE		
PREVIOUS YEAR MKT VALUE		445,105

PERMIT NUM	DESCRIPTION	AMT	ISSUED
22005338	REPAIR/RRF	12,898	04/06/2022
B1633359	ADDITION	12,857	11/01/2016
B13240	NEW CONSTR	208,375	07/01/2004
R6429	REPAIR/RRF	8,000	07/01/2004

SALES DATA

OFF RECORD Number	DATE	TYPE INST	Q U	V I	RSN CD	SALE PRICE
2700/219	3/15/2024	WD	Q	I	01	485,000
GRANTOR: HOWZE GREGORY LEE & V						
GRANTEE: SIMS DUSTIN J & GRI						
1290/0221	1/24/2005	WD	U	I	21	200,200
GRANTOR: MARONDA HOMES INC						
GRANTEE: HOWZE GREGORY & VER						

BUILDING NOTES

BUILDING DIMENSIONS

BAS=[YR=2004] W12 PTO=[YR=2004] N10 W22 S10 E22$ W28 FEP=[YR=2010] W10 S28 FGR=[YR=2004] S20 E30 N20 W30$ E10 N28$ S28 E20 S7 E2 FOP=[YR=2004] E6 N3 W6 S3$ N3 E6 S2 E12 N34$ PTR=N15 FUS=[YR=2004] N50 E40 S36 W12 N3 W7 N3 E7 N10 W8 S30 W20 $ S15$.

EXTRA FEATURES

LN	OB/XF CODE	DESCRIPTION	BLD	CAP	L	W	UNITS	UT	Adj R	ADJ UNIT PRICE	ORIG COND	YEAR ON	YEAR ACTUAL	Q	% COND	OB/XF MKT VALUE	NOTES
1	0812	CONCRETE C	0	100	0	0	1,869.00	SF	4.00	4.00	100	2004	2004	3	84	6,280	
2	0810	CONCRETE A	0	100	0	0	416.00	SF	6.50	6.50	100	2006	2006	3	87	2,352	
3	0910	SCRN RM L	0	100	34	18	612.00	SF	15.00	15.00	100	2017	2017	3	78	7,160	
4	0810	CONCRETE A	0	100	0	0	612.00	SF	6.50	6.50	100	2017	2017	3	97	3,859	
5	0810	CONCRETE A	0	100	10	5	50.00	SF	6.50	6.50	100	2017	2017	3	97	315	

LAND DESCRIPTION

TOTAL OB/XF 19,966

LN	USE CODE	CLS	LAND USE DESCRIPTION	CAP	RD	LOC ZONE	FRONT	DEPTH	TOT LND UTS	UNIT TYPE	DT	DPTH FACT	% COND	TOT ADJ	UNIT PRICE	ADJ UNIT PRICE	LAND VALUE	OTHER ADJUSTMENTS AND NOTES	YEAR	DENSITY	DECL	FRZ	YR	CONSRV
1	000100	C	SFR	100		RSF-1	0.00	0.00	1.00	LT		1.00	1.00	1.00	55,000.00	55,000.00	55,000							

REVIEW DATE 05/12/2019 BY KBA Total Acres: 0.00 Total Land Value: 55,000 Market: 0 Agricultural: 0 Common: 55,000 PRINTED 08/06/2024 BY SYS