BLOCK 9 LOT 3
IN OR 589/549
SPRING LAKE EST #2 PB 5/185

BETHEA THELMA G
54591 SPRING LAKE DRIVE
CALLAHAN, FL 32011

2024

46-2N-25-197B-0009-0030

BUILDING CHARACTERISTICS

ELEMENT	CD	CONSTRUCTION
Exterior Wall	20	FACE BRICK 100
Roof Structur	03	GABLE/HIP 100
Roof Cover	03	COMP SHNGL 100
Interior Wall	05	DRYWALL 100
Interior Floo	14	CARPET 90
Interior Floo	11	CLAY TILE 10
Air Condition	03	CENTRAL 100
Heating Type	04	AIR DUCTED 100
Bedrooms		3 100
Bathrooms		2 100
Frame	02	WOOD FRAME 100
Stories	1.	1. 100
Units		0 100
Occupancy	00	NONE 100
Quality	03	Quality Level 03
DOR CODE	0100	SINGLE FAMILY
MAP NUM		MKT AREA 08
NEIGHBORHOOD/LOC	8010.00	

AREA TYPE	TOTAL GROSS AREA	PCT OF BASE	TOT ADJ AREA	SUBAREA MARKET VALUE
BAS	1,999	100	1,999	207,129
FEP	396	80	317	32,847
FGR	616	55	339	35,126
FOP	15	30	4	415
TOTALS	3,026		2,659	275,516

MARKET ADJUSTMENTS

TYPE	MDL	EFF. AREA	TOT ADJ PTS	EFF. BASE RATE	REPL. COST NEW	AYB	EYB	ECON	FNCT		NORM	% COND
0900	01	2,659	104.9280	131.16	348,754	1990	1995	0	0	0	21.00	79.00

1 SNGL FAM – 100% - 1991 Heated Area: 1999 HX Base Yr 1991

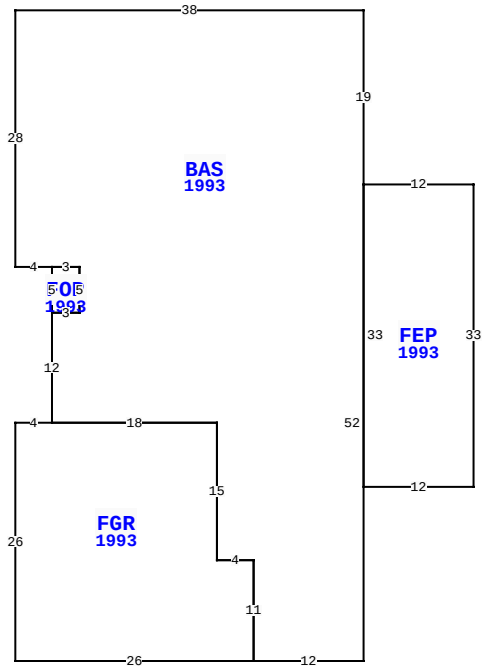

54591 SPRING LAKE DR, CALLAHAN

BLD DATE		LGL DATE	
XF DATE		LAND DATE	04/04/2024 MLU
INC DATE		AG DATE	

NASSAU COUNTY PROPERTY

PAGE 1 of 1 6

VALUATION SUMMARY

VALUATION BY		STANDARD
Tax Group: 6	Tax Dist:	
BUILDING MARKET VALUE		275,516
TOTAL MARKET OB/XF VALUE		16,627
TOTAL LAND VALUE - MARKET		55,000
TOTAL MARKET VALUE		347,143
SOH/AGL Deduction		189,429
ASSESSED VALUE		157,714
TOTAL EXEMPTION VALUE	HX HB WX	55,000
BASE TAXABLE VALUE		102,714
TOTAL JUST VALUE		347,143
NCON VALUE		0
INCOME VALUE		
PREVIOUS YEAR MKT VALUE		331,347

PERMIT NUM	DESCRIPTION	AMT	ISSUED
6491	NEW CONSTR	82,492	05/30/1990

SALES DATA

OFF RECORD Number	DATE	TYPE INST	Q U /	V I /	RSN CD	SALE PRICE
0589/0549	2/01/1990	WD	Q	V		16,000
GRANTOR: JOHNSON JAMES & E						
GRANTEE: BETHEA BILLY & T						
0562/0247	1/31/1989	WD	Q	V		14,900
GRANTOR: SPRING LAKE EST						
GRANTEE: JOHNSON JAMES & I E						

BUILDING NOTES

BUILDING DIMENSIONS

FEP=[YR=1993] W12 BAS=[YR=1993] N19 W38 S28 E4 FOP=[YR=1993] S5 E3 N5 W3$ E3 S5 W3 S12 FGR=[YR=1993] W4 S26 E26 N11 W4 N15 W18$ E18 S15 E4 S11 E12 N52$ S33 E12 N33$.

EXTRA FEATURES

LN	OB/XF CODE	DESCRIPTION	BLD	CAP	L	W	UNITS	UT	Adj R	ADJ UNIT PRICE	ORIG COND	YEAR ON	YEAR ACTUAL	Q	% COND	OB/XF MKT VALUE	NOTES
1	0500	FP-PRE FAB	0	100	0	0	1.00	UT	3,500.00	3,500.00	100	1990	1990	3	68	2,380	
2	0510	GARAGE WD-	0	100	24	24	576.00	SF	35.00	35.00	100	1990	1990	3	20	4,032	
3	0812	CONCRETE C	0	100	0	0	4,292.00	SF	4.00	4.00	100	1990	1990	3	59.5	10,215	

LAND DESCRIPTION

TOTAL OB/XF 16,627

LN	USE CODE	CLS	LAND USE DESCRIPTION	CAP	RD	LOC ZONE	FRONT	DEPTH	TOT LND UTS	UNIT TYPE	DT	DPTH FACT	% COND	TOT ADJ	UNIT PRICE	ADJ UNIT PRICE	LAND VALUE	OTHER ADJUSTMENTS AND NOTES	YEAR	DENSITY	DECL	FRZ	YR	CONSRV
1	000100	C	SFR	100		RSF-1	0.00	0.00	1.00	LT		1.00	1.00	1.00	55,000.00	55,000.00	55,000							

REVIEW DATE 02/04/2021 BY KB Total Acres: 0.00 Total Land Value: 55,000 Market: 0 Agricultural: 0 Common: 55,000 PRINTED 08/06/2024 BY SYS