BLOCK 6 LOT 6
SPRING LAKE EST #2 PB 5/185

POWELL RICHARD T & JENNIFER A
55354 DEER RUN ROAD
CALLAHAN, FL 32011

2024

46-2N-25-197B-0006-0060

NASSAU COUNTY PROPERTY

BUILDING CHARACTERISTICS

ELEMENT	CD	CONSTRUCTION
Exterior Wall	20	FACE BRICK 80
Exterior Wall	20	FACE BRICK 20
Roof Structur	03	GABLE/HIP 100
Roof Cover	03	COMP SHNGL 100
Interior Wall	05	DRYWALL 100
Interior Floo	11	CLAY TILE 70
Interior Floo	12	HARDWOOD 30
Air Condition	03	CENTRAL 100
Heating Type	04	AIR DUCTED 100
Bedrooms		3 100
Bathrooms		2.5 100
Frame	02	WOOD FRAME 100
Stories	1.5	1.5 100
Units		0 100
Occupancy	00	NONE 100
Quality	03	Quality Level 03
DOR CODE	0100	SINGLE FAMILY
MAP NUM		MKT AREA 08
NEIGHBORHOOD/LOC	8010.00	

AREA TYPE	TOTAL GROSS AREA	PCT OF BASE	TOT ADJ AREA	SUBAREA MARKET VALUE
BAS	644	100	644	79,281
BAS	1,779	100	1,779	219,007
FGR	529	55	291	35,824
FOP	75	30	22	2,708
FSP	133	40	53	6,525
TOTALS	3,160		2,789	343,344

MARKET ADJUSTMENTS

TYPE	MDL	EFF. AREA	TOT ADJ PTS	EFF. BASE RATE	REPL. COST NEW	AYB	EYB	ECON	FNCT		NORM	% COND
0900	01	2,789	113.8560	142.32	396,930	1995	2005	0	0	0	13.50	86.50

1 SNGL FAM – 100% - 2022 Heated Area: 2423 HX Base Yr 2022

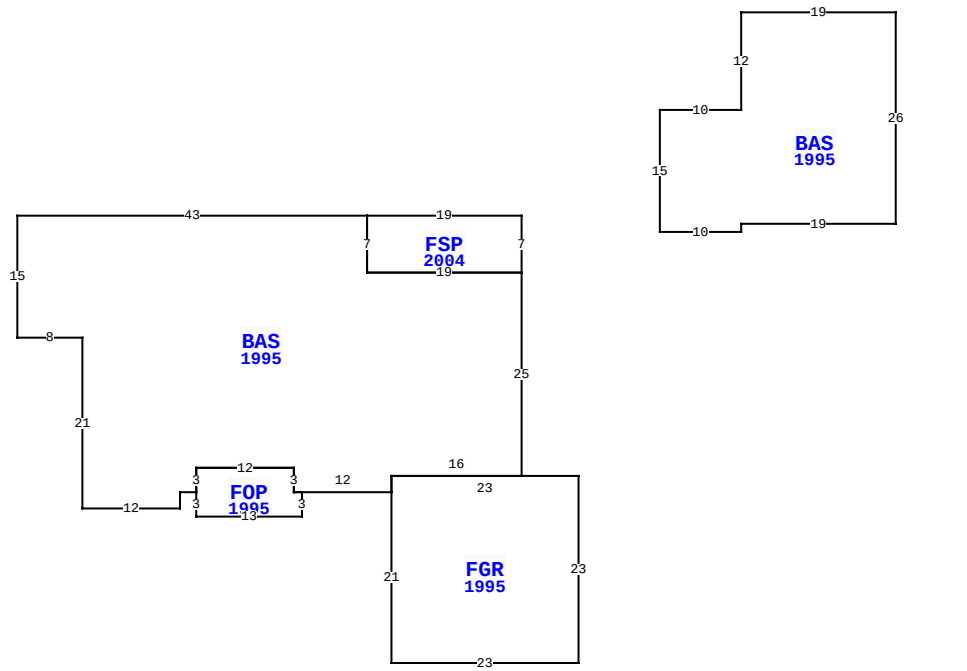

55354 DEER RUN RD, CALLAHAN

BLD DATE		LGL DATE	
XF DATE		LAND DATE	04/04/2024 MLU
INC DATE		AG DATE	

VALUATION SUMMARY

VALUATION BY		STANDARD
Tax Group: 6	Tax Dist:	
BUILDING MARKET VALUE		343,344
TOTAL MARKET OB/XF VALUE		68,484
TOTAL LAND VALUE - MARKET		55,000
TOTAL MARKET VALUE		466,828
SOH/AGL Deduction		98,811
ASSESSED VALUE		368,017
TOTAL EXEMPTION VALUE	HX HB VX	55,000
BASE TAXABLE VALUE		313,017
TOTAL JUST VALUE		466,828
NCON VALUE		0
INCOME VALUE		
PREVIOUS YEAR MKT VALUE		450,078

PERMIT NUM	DESCRIPTION	AMT	ISSUED
B1429104	SWIM POOL	36,318	07/01/2014
B12828	GARAGE	14,520	05/01/2004
R6175	REPAIR/RRF	700	05/01/2004
B941489	NEW CONSTR	120,000	12/01/1994
P94761	NEW CONSTR	0	12/01/1994
B9401489	NEW CONSTR	0	11/18/1994

SALES DATA

OFF RECORD Number	DATE	TYPE INST	Q U	V I	RSN CD	SALE PRICE
2483/0084	7/23/2021	WD	Q	I	01	420,000
GRANTOR: NORMAN JONATHAN A & K						
GRANTEE: POWELL RICHARD T &						
2076/0480	10/04/2016	WD	Q	I	01	243,000
GRANTOR: MINTON TAMMY L						
GRANTEE: NORMAN JONATHAN ADA						

BUILDING NOTES

BUILDING DIMENSIONS

BAS=[YR=1995;ORIG=-19,0] W43 S15 E8 S21 E12 N2 E2 N3 E12 S3 E12 N2 E16 N25 W19 N7 $
BAS=[YR=1995;ORIG=17,2] N15 E10 N12 E19 S26 W19 S1 W10 $
FGR=[YR=1995;ORIG=-16,34] S21 E23 N23 W23 S2 $
FSP=[YR=2004;ORIG=0,0] W19 S7 E19 N7 $
FOP=[YR=1995;ORIG=-40,34] S3 E13 N3 W1 N3 W12 S3 $
.

EXTRA FEATURES

LN	OB/XF CODE	DESCRIPTION	BLD	CAP	L	W	UNITS	UT	Adj R	ADJ UNIT PRICE	ORIG COND	YEAR ON	YEAR ACTUAL	Q	% COND	OB/XF MKT VALUE	NOTES
1	0500	FP-PRE FAB	0	100	0	0	1.00	UT	3,500.00	3,500.00	100	1995	1995	3	77	2,695	
2	0812	CONCRETE C	0	100	0	0	2,890.00	SF	4.00	4.00	100	1995	1995	3	70	8,092	
3	0510	GARAGE WD-	0	100	22	20	440.00	SF	35.00	35.00	100	2004	2004	3	36	5,544	
4	0681	POLE SHED	0	100	22	12	264.00	SF	15.00	15.00	100	2011	2011	3	64	2,534	
5	0861	POOL GUNIT	0	100	33	15	495.00	SF	85.00	85.00	100	2015	2015	3	78	32,819	
6	0855	CONC PAVER	0	100	0	0	1,425.00	SF	10.00	10.00	100	2015	2015	3	95	13,538	
7	0462	ST/AL FNC	0	100	0	0	384.00	SF	10.00	10.00	100	2015	2015	3	78	2,995	
8	0463	FENCE GATE	0	100	0	0	1.00	UT	300.00	300.00	100	2015	2015	3	89	267	

LAND DESCRIPTION

TOTAL OB/XF 68,484

LN	USE CODE	CLS	LAND USE DESCRIPTION	CAP	RD	LOC ZONE	FRONT	DEPTH	TOT LND UTS	UNIT TYPE	DT	DPTH FACT	% COND	TOT ADJ	UNIT PRICE	ADJ UNIT PRICE	LAND VALUE	OTHER ADJUSTMENTS AND NOTES	YEAR	DENSITY	DECL	FRZ	YR	CONSRV
1	000100	C	SFR	100	0006	RSF-1	0.00	0.00	1.00	LT		1.00	1.00	1.00	55,000.00	55,000.00	55,000							

REVIEW DATE 05/18/2021 BY KBA Total Acres: 0.00 Total Land Value: 55,000 Market: 0 Agricultural: 0 Common: 55,000 PRINTED 08/06/2024 BY SYS