BLOCK 4 LOT 9
SPRING LAKE EST #1 PB 5/183

COLLINS A F L/E/
55145 DEER RUN RD
CALLAHAN, FL 32011

2024

46-2N-25-197A-0004-0090

NASSAU COUNTY PROPERTY

BUILDING CHARACTERISTICS

ELEMENT	CD	CONSTRUCTION
Exterior Wall	20	FACE BRICK 60
Exterior Wall	05	AVERAGE 40
Roof Structur	03	GABLE/HIP 100
Roof Cover	03	COMP SHNGL 100
Interior Wall	05	DRYWALL 100
Interior Floo	11	CLAY TILE 50
Interior Floo	14	CARPET 50
Air Condition	03	CENTRAL 100
Heating Type	04	AIR DUCTED 100
Bedrooms		3 100
Bathrooms		3 100
Frame	02	WOOD FRAME 100
Stories	1.5	1.5 100
Units		0 100
Occupancy	00	NONE 100
Quality	03	Quality Level 03
DOR CODE	0100	SINGLE FAMILY
MAP NUM		MKT AREA 08
NEIGHBORHOOD/LOC	8010.00	

AREA TYPE	TOTAL GROSS AREA	PCT OF BASE	TOT ADJ AREA	SUBAREA MARKET VALUE
BAS	1,408	100	1,408	155,844
FGR	738	55	406	44,938
FOP	180	30	54	5,977
FSP	208	40	83	9,186
FST	88	55	48	5,313
FUS	603	100	603	66,743
TOTALS	3,225		2,602	288,002

MARKET ADJUSTMENTS

TYPE	MDL	EFF. AREA	TOT ADJ PTS	EFF. BASE RATE	REPL. COST NEW	AYB	EYB	ECON	FNCT		NORM	% COND
0900	01	2,602	111.6480	139.56	363,135	1990	1990	0	0	0	20.69	79.31

1 SNGL FAM – 100% - 1991 Heated Area: 2011 HX Base Yr 1991

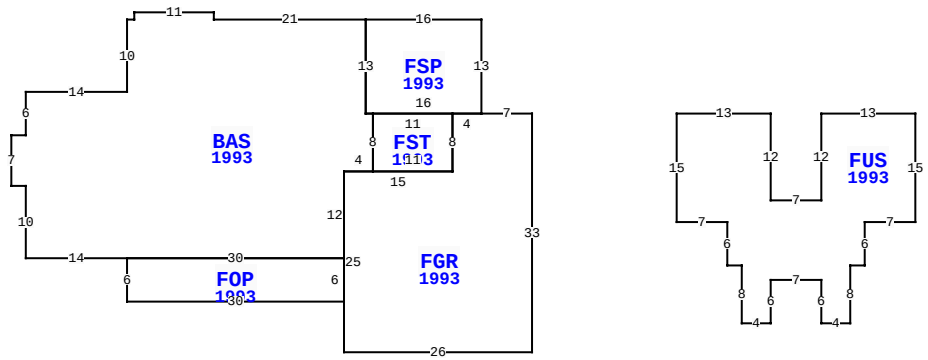

55145 DEER RUN RD, CALLAHAN

BLD DATE	07/28/2008 JW	LGL DATE	
XF DATE	07/28/2008 JW	LAND DATE	04/04/2024 MLU
INC DATE		AG DATE	

VALUATION SUMMARY

VALUATION BY		STANDARD
Tax Group: 6	Tax Dist:	
BUILDING MARKET VALUE		288,002
TOTAL MARKET OB/XF VALUE		21,269
TOTAL LAND VALUE - MARKET		55,000
TOTAL MARKET VALUE		364,271
SOH/AGL Deduction		189,578
ASSESSED VALUE		174,693
TOTAL EXEMPTION VALUE	HX HB WR	55,000
BASE TAXABLE VALUE		119,693
TOTAL JUST VALUE		364,271
NCON VALUE		0
INCOME VALUE		
PREVIOUS YEAR MKT VALUE		346,797

PERMIT NUM	DESCRIPTION	AMT	ISSUED
B952173	SWIM POOL	10,900	08/01/1995
6107	NEW CONSTR	88,385	11/08/1989

SALES DATA

OFF RECORD Number	DATE	TYPE INST	Q / U	V / I	RSN CD	SALE PRICE
2272/0804	4/29/2019	LE	U	I	11	100
GRANTOR: COLLINS A F						
GRANTEE: MCDOWELL CHRISTY &						
0537/0740	2/24/1988	WD	Q	V		12,700
GRANTOR: SPRING LAKE EST						
GRANTEE: COLLINS A F						

BUILDING NOTES

BUILDING DIMENSIONS

FGR=[YR=1993] W7 FSP=[YR=1993] N13 W16 BAS=[YR=1993] W21 N1 W11 S1 W1 S10 W14 S6 W2 S7 E2 S10 E14 FOP=[YR=1993] S6 E30 N6 W30$ E30 N12 E4 FST=[YR=1993] E11 N8 W11 S8$ N8W1 N13$ S13 E16$ W4 S8 W15 S25 E26 N33$ PTR= E20 FUS=[YR=1993] E13 S12 E7 N12 E13 S15 W7 S6 W2 S8 W4 N6 W7 S6 W4 N8 W2 N6 W7 N15 $ W20$.

EXTRA FEATURES

LN	OB/XF CODE	DESCRIPTION	BLD	CAP	L	W	UNITS	UT	Adj R	ADJ UNIT PRICE	ORIG COND	YEAR ON	YEAR ACTUAL	Q	% COND	OB/XF MKT VALUE	NOTES
1	0500	FP-PRE FAB	0	100	0	0	1.00	UT	3,500.00	3,500.00	100	1990	1990	3	68	2,380	
2	0811	CONCRETE B	0	100	0	0	792.00	SF	5.20	5.20	100	1990	1990	3	59.5	2,450	
3	0861	POOL GUNIT	0	100	0	0	420.00	SF	85.00	85.00	100	1995	1995	3	20	7,140	
4	0845	KOOL DECK	0	100	0	0	708.00	SF	7.25	7.25	100	1995	1995	3	70	3,593	
5	0812	CONCRETE C	0	100	0	0	1,811.00	SF	4.00	4.00	100	1993	1993	3	66	4,781	
6	0810	CONCRETE A	0	100	0	0	195.00	SF	6.50	6.50	100	1997	1997	3	73	925	

LAND DESCRIPTION

TOTAL OB/XF 21,269

LN	USE CODE	CLS	LAND USE DESCRIPTION	CAP	RD	LOC ZONE	FRONT	DEPTH	TOT LND UTS	UNIT TYPE	DT	DPTH FACT	% COND	TOT ADJ	UNIT PRICE	ADJ UNIT PRICE	LAND VALUE	OTHER ADJUSTMENTS AND NOTES	YEAR	DENSITY	DECL	FRZ	YR	CONSRV
1	000100	C	SFR	100	0006	RSF-1	0.00	0.00	1.00	LT		1.00	1.00	1.00	55,000.00	55,000.00	55,000							

REVIEW DATE 05/12/2019 BY KBA Total Acres: 0.00 Total Land Value: 55,000 Market: 0 Agricultural: 0 Common: 55,000 PRINTED 08/06/2024 BY SYS