BLOCK 3 LOT 23
IN OR 571 PG 904
SPRING LAKE EST #1 PB 5/183

ROWLAND HERMAN G & SUSAN M
55212 DEER RUN DRIVE
CALLAHAN, FL 32011

2024

46-2N-25-197A-0003-0230

NASSAU COUNTY PROPERTY

BUILDING CHARACTERISTICS

ELEMENT	CD	CONSTRUCTION
Exterior Wall	20	FACE BRICK 100
Roof Structur	03	GABLE/HIP 100
Roof Cover	03	COMP SHNGL 100
Interior Wall	05	DRYWALL 100
Interior Floo	14	CARPET 90
Interior Floo	08	SHT VINYL 10
Air Condition	01	NONE 100
Heating Type	01	NONE 100
Bedrooms		1 100
Bathrooms		1 100
Frame	02	WOOD FRAME 100
Stories	2.	2. 100
Units		0 100
Occupancy	00	NONE 100
Quality	06	Quality Level 06

DOR CODE 0100 SINGLE FAMILY
MAP NUM | MKT AREA 08
NEIGHBORHOOD/LOC 8010.00

AREA TYPE	TOTAL GROSS AREA	PCT OF BASE	TOT ADJ AREA	SUBAREA MARKET VALUE
BAS	725	100	725	32,071
FUS	392	100	392	17,341
TOTALS	1,117		1,117	49,411

MARKET ADJUSTMENTS

TYPE	MDL	EFF. AREA	TOT ADJ PTS	EFF. BASE RATE	REPL. COST NEW	AYB	EYB	ECON	FNCT		NORM	% COND
0150	01	1,117	115.8050	57.90	64,674	1991	1991	0	0	0	23.60	76.40

1 ACCESORY U – 100% - 1996 Heated Area: 1117 HX Base Yr 1996

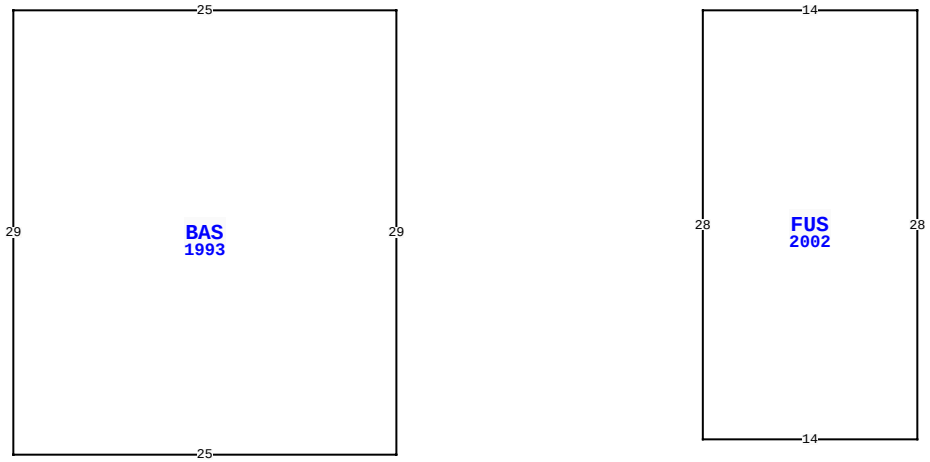

55212 DEER RUN RD, CALLAHAN

BLD DATE		LGL DATE	
XF DATE		LAND DATE	04/04/2024 MLU
INC DATE		AG DATE	

VALUATION SUMMARY

VALUATION BY		STANDARD
Tax Group: 6	Tax Dist:	
BUILDING MARKET VALUE		485,429
TOTAL MARKET OB/XF VALUE		15,341
TOTAL LAND VALUE - MARKET		55,000
TOTAL MARKET VALUE		555,770
SOH/AGL Deduction		86,064
ASSESSED VALUE		469,706
TOTAL EXEMPTION VALUE	HX HB	50,000
BASE TAXABLE VALUE		419,706
TOTAL JUST VALUE		555,770
NCON VALUE		0
INCOME VALUE		
PREVIOUS YEAR MKT VALUE		534,928

PERMIT NUM	DESCRIPTION	AMT	ISSUED
21008660	CO ISSUED	0	07/01/2021
18004489	REPAIR/RRF	100,000	06/01/2018
93591	NEW CONSTR	50,133	11/11/1993
3794	NEW CONSTR	4,000	01/30/1990
B6085	NEW CONSTR	98,818	10/31/1989

SALES DATA

OFF RECORD Number	DATE	TYPE INST	Q U	V I	RSN CD	SALE PRICE
0571/0904	6/02/1989	WD	Q	V		31,700

GRANTOR: SPRING LAKE EST
GRANTEE: ROWLAND HERMAN & S

BUILDING NOTES

BUILDING DIMENSIONS

BAS=[YR=1993] W25 S29 E25 N29$ PTR= E20 FUS=[YR=2002] E14 S28 W14 N28$ W20$.

EXTRA FEATURES

LN	OB/XF CODE	DESCRIPTION	BLD	CAP	L	W	UNITS	UT	Adj R	ADJ UNIT PRICE	ORIG COND	YEAR ON	YEAR ACTUAL	Q	% COND	OB/XF MKT VALUE	NOTES
1	0812	CONCRETE C	0	100	0	0	3,681.00	SF	4.00	4.00	100	2002	2002	3	82	12,074	
2	0473	VF 3 RAIL	0	100	0	0	176.00	LF	7.50	7.50	100	2002	2002	3	58	766	
3	0470	VNYL GATE	0	100	0	0	2.00	UT	330.00	330.00	100	2002	2002	3	58	383	
4	0473	VF 3 RAIL	0	100	0	0	54.00	LF	7.50	7.50	100	2004	2004	3	64	259	
5	0476	VF 6 SBPL	0	100	0	0	88.00	LF	32.00	32.00	100	2005	2005	3	66	1,859	

LAND DESCRIPTION

TOTAL OB/XF 15,341

LN	USE CODE	CLS	LAND USE DESCRIPTION	CAP	RD	LOC ZONE	FRONT	DEPTH	TOT LND UTS	UNIT TYPE	DT	DPTH FACT	% COND	TOT ADJ	UNIT PRICE	ADJ UNIT PRICE	LAND VALUE	OTHER ADJUSTMENTS AND NOTES	YEAR	DENSITY	DECL	FRZ	YR	CONSRV
1	000134	C	SFR POND	100		RSF-1	0.00	0.00	1.00	LT		1.00	1.00	1.00	55,000.00	55,000.00	55,000							

REVIEW DATE 10/21/2021 BY KB Total Acres: 0.00 Total Land Value: 55,000 Market: 0 Agricultural: 0 Common: 55,000 PRINTED 08/06/2024 BY SYS

BLOCK 3 LOT 23
IN OR 571 PG 904
SPRING LAKE EST #1 PB 5/183

ROWLAND HERMAN G & SUSAN M
55212 DEER RUN DRIVE
CALLAHAN, FL 32011

2024

46-2N-25-197A-0003-0230

BUILDING CHARACTERISTICS

ELEMENT	CD	CONSTRUCTION
Exterior Wall	19	COMMON BRK 100
Roof Structur	08	IRREGULAR 100
Roof Cover	03	COMP SHNGL 100
Interior Wall	05	DRYWALL 100
Interior Floo	11	CLAY TILE 50
Interior Floo	14	CARPET 50
Air Condition	03	CENTRAL 100
Heating Type	04	AIR DUCTED 100
Bedrooms		3 100
Bathrooms		2.5 100
Frame	02	WOOD FRAME 100
Stories	2.	2. 100
Units		0 100
Occupancy	00	NONE 100
Quality	03	Quality Level 03
DOR CODE	0100	SINGLE FAMILY
MAP NUM		MKT AREA 08
NEIGHBORHOOD/LOC	8010.00	

AREA TYPE	TOTAL GROSS AREA	PCT OF BASE	TOT ADJ AREA	SUBAREA MARKET VALUE
BAS	1,854	100	1,854	275,052
FGR	600	55	330	48,958
FOP	20	30	6	890
FOP	149	30	45	6,676
FUS	673	100	673	99,844
PTO	453	5	23	3,413
STR	79	10	8	1,187
TOTALS	3,828		2,939	436,018

MARKET ADJUSTMENTS

TYPE	MDL	EFF. AREA	TOT ADJ PTS	EFF. BASE RATE	REPL. COST NEW	AYB	EYB	ECON	FNCT		NORM	% COND
0900	01	2,939	121.7300	152.16	447,198	2007	2021	0	0	0	2.50	97.50

2 SNGL FAM – 100% - 1996 Heated Area: 2527 HX Base Yr 1996

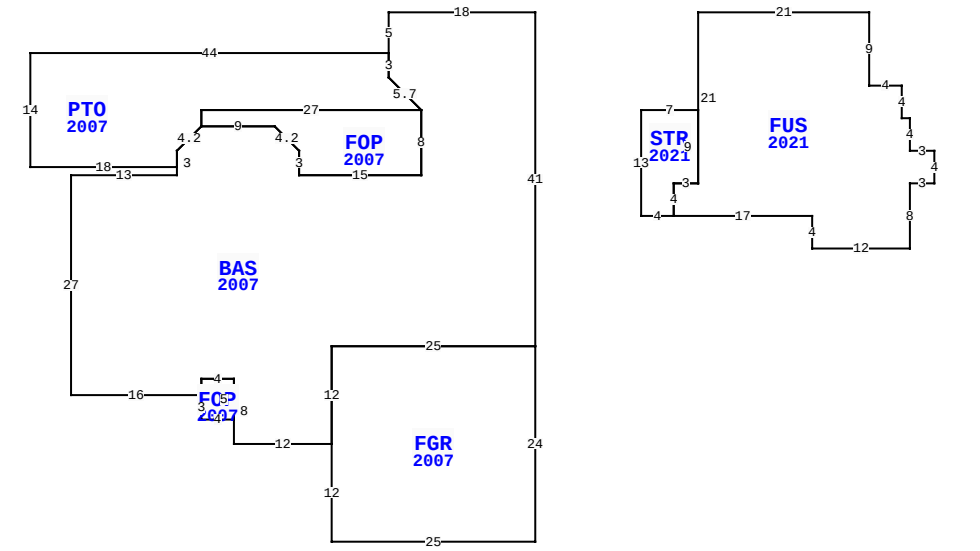

55212 DEER RUN RD, CALLAHAN

BLD DATE		LGL DATE	
XF DATE		LAND DATE	04/04/2024 MLU
INC DATE		AG DATE	

NASSAU COUNTY PROPERTY

PAGE 2 of 2 6

VALUATION SUMMARY

VALUATION BY		STANDARD
Tax Group: 6	Tax Dist:	
BUILDING MARKET VALUE		485,429
TOTAL MARKET OB/XF VALUE		15,341
TOTAL LAND VALUE - MARKET		55,000
TOTAL MARKET VALUE		555,770
SOH/AGL Deduction		86,064
ASSESSED VALUE		469,706
TOTAL EXEMPTION VALUE	HX HB	50,000
BASE TAXABLE VALUE		419,706
TOTAL JUST VALUE		555,770
NCON VALUE		0
INCOME VALUE		
PREVIOUS YEAR MKT VALUE		534,928

PERMIT NUM	DESCRIPTION	AMT	ISSUED

SALES DATA

OFF RECORD Number	DATE	TYPE INST	Q U	V I	RSN CD	SALE PRICE
0571/0904	6/02/1989	WD	Q	V		31,700

GRANTOR: SPRING LAKE EST

GRANTEE: ROWLAND HERMAN & S

BUILDING NOTES

BUILDING DIMENSIONS

BAS=[YR=2007] W18 S5 PTO=[YR=2007] W44 S14 E18 N2 U3 R3 FOP=[YR=2007] E9 D3 R3 S3 E15 N8 W27 S2$ N2 E27 U4 L4 N3$ S3 D4 R4 S8 W15 N3 U3 L3 W9 D3 L3 S3 W13 S27 E16 FOP=[YR=2007] S3 E4 N5 W4 S2$ N2 E4 S8 E12 FGR=[YR=2007] S12 E25 N24 W25 S12$ N12 E25 N41$ PTR=E20 FUS=[YR=2021] E21 S9 E4 S4 E1 S4 E3 S4 W3 S8 W12 N4 W17 STR=[YR=2021] W4 N13 E7 S9 W3 S4$ N4 E3 N21$ W20$.

EXTRA FEATURES

L N	OB/XF CODE	DESCRIPTION	BLD	CAP	L	W	UNITS	UT	Adj R	ADJ UNIT PRICE	ORIG COND	YEAR ON	YEAR ACTUAL	Q	% COND	OB/XF MKT VALUE	NOTES

LAND DESCRIPTION

TOTAL OB/XF 0

L N	USE CODE	CLS	LAND USE DESCRIPTION	CAP	R D	LOC ZONE	FRONT	DEPTH	TOT LND UTS	UNIT TYPE	D T	DPTH FACT	% COND	TOT ADJ	UNIT PRICE	ADJ UNIT PRICE	LAND VALUE	OTHER ADJUSTMENTS AND NOTES	YEAR	DENSITY	DECL	FRZ	YR	CONSRV

REVIEW DATE 10/21/2021 BY KB Total Acres: 0.00 Total Land Value: 55,000 Market: 0 Agricultural: 0 Common: 55,000 PRINTED 08/06/2024 BY SYS