BLOCK 3 LOT 12
IN OR 1232/180
SPRING LAKE EST #1 PB 5/183

UNDERWOOD JILL
55030 DEER RUN RD
CALLAHAN, FL 32011

2024

46-2N-25-197A-0003-0120

NASSAU COUNTY PROPERTY

BUILDING CHARACTERISTICS

ELEMENT	CD	CONSTRUCTION
Exterior Wall	12	CEDAR 100
Roof Structur	03	GABLE/HIP 100
Roof Cover	03	COMP SHNGL 100
Interior Wall	05	DRYWALL 90
Interior Wall	06	CUST PANEL 10
Interior Floo	14	CARPET 60
Interior Floo	11	CLAY TILE 40
Air Condition	03	CENTRAL 100
Heating Type	04	AIR DUCTED 100
Bedrooms		3 100
Bathrooms		2.5 100
Frame	02	WOOD FRAME 100
Stories	2.	2. 100
Units		0 100
Occupancy	00	NONE 100
Quality	03	Quality Level 03

DOR CODE	0100	SINGLE FAMILY	
MAP NUM		MKT AREA	08
NEIGHBORHOOD/LOC	8010.00		

AREA TYPE	TOTAL GROSS AREA	PCT OF BASE	TOT ADJ AREA	SUBAREA MARKET VALUE
BAS	1,629	100	1,629	193,096
BAS	80	100	80	9,483
FOP	50	30	15	1,778
FOP	102	30	31	3,675
FOP	430	30	129	15,291
FUS	536	100	536	63,536
PTO	75	5	4	474
UGR	576	45	259	30,701
TOTALS	3,478		2,683	318,034

MARKET ADJUSTMENTS

TYPE	MDL	EFF. AREA	TOT ADJ PTS	EFF. BASE RATE	REPL. COST NEW	AYB	EYB	ECON	FNCT		NORM	% COND
0900	01	2,683	113.5680	141.96	380,879	1990	1990	0	0	0	16.50	83.50

1 SNGL FAM – 100% - 2024 Heated Area: 2245 HX Base Yr 2024

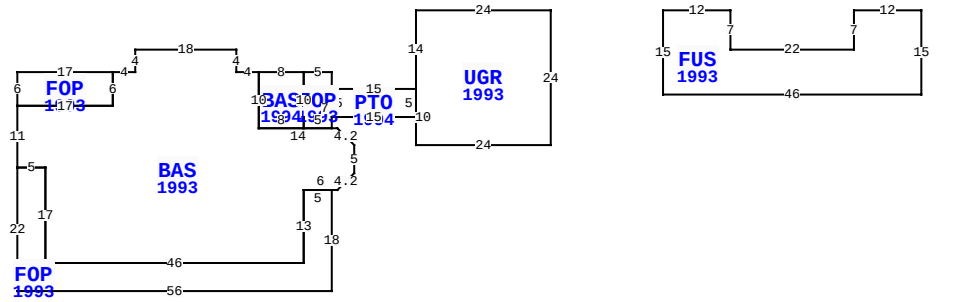

55030 DEER RUN RD, CALLAHAN

BLD DATE		LGL DATE	
XF DATE		LAND DATE	04/04/2024 MLU
INC DATE		AG DATE	

VALUATION SUMMARY

VALUATION BY		STANDARD
Tax Group: 6	Tax Dist:	
BUILDING MARKET VALUE		318,034
TOTAL MARKET OB/XF VALUE		7,609
TOTAL LAND VALUE - MARKET		55,000
TOTAL MARKET VALUE		380,643
SOH/AGL Deduction		91,506
ASSESSED VALUE		289,137
TOTAL EXEMPTION VALUE	HX HB	50,000
BASE TAXABLE VALUE		239,137
TOTAL JUST VALUE		380,643
NCON VALUE		0
INCOME VALUE		
PREVIOUS YEAR MKT VALUE		361,948

PERMIT NUM	DESCRIPTION	AMT	ISSUED
B240001411	SCREEN ROOM ON NE	7,639	02/05/2024
6292	NEW CONSTR	100,423	02/16/1990

SALES DATA

OFF RECORD Number	DATE	TYPE INST	Q / U	V / I	RSN CD	SALE PRICE
1232/0180	5/20/2004	WD	Q	I		184,000
GRANTOR: WOOD SHELLEY J						
GRANTEE: UNDERWOOD JILL						
0687/0502	8/25/1993	WD	Q	I		126,500
GRANTOR: PEEBLES MACK & BEV						
GRANTEE: WOOD STEVEN & S J						

BUILDING NOTES

BUILDING DIMENSIONS

UGR=[YR=1993] W24 S14 PTO=[YR=1994] W15 FOP=[YR=1993] N3 W5 BAS=[YR=1994] W8 BAS=[YR=1993] W4 N4 W18 S4 W4 FOP=[YR=1993] W17 S6 E17 N6$ S6 W17 S11 FOP=[YR=1993] S22 E56 N18 W5 S13 W46 N17 W5$ E5 S17 E46 N13 E6 U3 R3 N5 L3 U3 W14 N10$S10 E8 N10$ S10 E5 N7$ S5 E15 N5$ S10E24 N24$ PTR=E20 FUS=[YR=1993] E12 S7 E22 N7 E12 S15 W46 N15$ W20$.

EXTRA FEATURES

LN	OB/XF CODE	DESCRIPTION	BLD	CAP	L	W	UNITS	UT	Adj R	ADJ UNIT PRICE	ORIG COND	YEAR ON	YEAR ACTUAL	Q	% COND	OB/XF MKT VALUE	NOTES
1	0500	FP-PRE FAB	0	100	0	0	1.00	UT	3,500.00	3,500.00	100	1990	1990	3	68	2,380	
2	0812	CONCRETE C	0	100	0	0	2,197.00	SF	4.00	4.00	100	1990	1990	3	59.5	5,229	

LAND DESCRIPTION

TOTAL OB/XF 7,609

LN	USE CODE	CLS	LAND USE DESCRIPTION	CAP	RD	LOC ZONE	FRONT	DEPTH	TOT LND UTS	UNIT TYPE	DT	DPTH FACT	% COND	TOT ADJ	UNIT PRICE	ADJ UNIT PRICE	LAND VALUE	OTHER ADJUSTMENTS AND NOTES	YEAR	DENSITY	DECL	FRZ	YR	CONSRV
1	000100	C	SFR	100	0006	RSF-1	0.00	0.00	1.00	LT		1.00	1.00	1.00	55,000.00	55,000.00	55,000							

REVIEW DATE 06/06/2024 BY TW Total Acres: 0.00 Total Land Value: 55,000 Market: 0 Agricultural: 0 Common: 55,000 PRINTED 08/06/2024 BY SYS