LOT 126
IN OR 1959/1512
CLEAR LAKE ESTATES #1 PB 7/346

SUTTON GEORGE & MARIAN
54022 ASHERTON COVE
CALLAHAN, FL 32011

2024

46-2N-25-0240-0126-0000

BUILDING CHARACTERISTICS

ELEMENT	CD	CONSTRUCTION
Exterior Wall	20	FACE BRICK 100
Roof Structur	03	GABLE/HIP 100
Roof Cover	03	COMP SHNGL 100
Interior Wall	05	DRYWALL 100
Interior Floo	08	SHT VINYL 100
Air Condition	03	CENTRAL 100
Heating Type	04	AIR DUCTED 100
Bedrooms		4 100
Bathrooms		2 100
Frame	02	WOOD FRAME 100
Stories	1.	1. 100
Units		0 100
Occupancy	00	NONE 100
Quality	04	Quality Level 04
DOR CODE	0100	SINGLE FAMILY
MAP NUM		MKT AREA 08
NEIGHBORHOOD/LOC	8015.00	

AREA TYPE	TOTAL GROSS AREA	PCT OF BASE	TOT ADJ AREA	SUBAREA MARKET VALUE
BAS	1,606	100	1,606	213,599
FGR	460	55	253	33,649
FOP	6	30	2	266
FOP	21	30	6	798
FOP	90	30	27	3,591
PTO	90	5	4	532
TOTALS	2,273		1,898	252,435

MARKET ADJUSTMENTS

TYPE	MDL	EFF. AREA	TOT ADJ PTS	EFF. BASE RATE	REPL. COST NEW	AYB	EYB	ECON	FNCT		NORM	% COND
0900	01	1,898	113.1900	141.49	268,548	2015	2015	0	0	0	6.00	94.00

1 SNGL FAM – 100% - 2016 Heated Area: 1606 HX Base Yr 2016

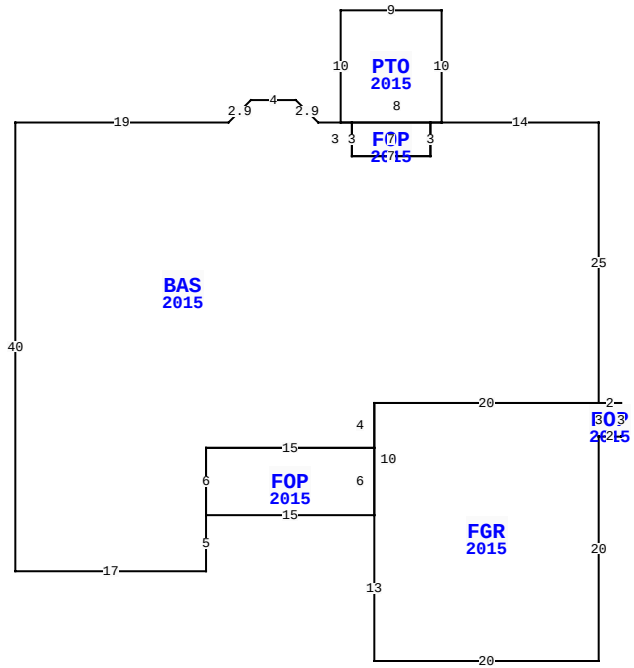

54022 ASHERTON CV, CALLAHAN

BLD DATE		LGL DATE	
XF DATE		LAND DATE	05/14/2014 MF
INC DATE		AG DATE	

NASSAU COUNTY PROPERTY

PAGE 1 of 1 6

VALUATION SUMMARY

VALUATION BY		STANDARD
Tax Group: 6	Tax Dist:	
BUILDING MARKET VALUE		252,435
TOTAL MARKET OB/XF VALUE		14,616
TOTAL LAND VALUE - MARKET		60,000
TOTAL MARKET VALUE		327,051
SOH/AGL Deduction		145,325
ASSESSED VALUE		181,726
TOTAL EXEMPTION VALUE	HX HB	50,000
BASE TAXABLE VALUE		131,726
TOTAL JUST VALUE		327,051
NCON VALUE		0
INCOME VALUE		
PREVIOUS YEAR MKT VALUE		304,977

PERMIT NUM	DESCRIPTION	AMT	ISSUED
B1531081	CO ISSUED	0	12/10/2015
B1531233	GARAGE	10,399	10/01/2015
B1531081	NEW CONSTR	201,139	09/01/2015

SALES DATA

OFF RECORD Number	DATE	TYPE INST	Q U	V I	RSN CD	SALE PRICE
1959/1512	1/21/2015	WD	U	I	37	40,000
GRANTOR: GREENE KENNETH L						
GRANTEE: SUTTON GEORGE & MAR						
1753/0771	8/18/2011	WD	U	I	12	850,000
GRANTOR: FEDERAL DEPOSIT INSUR						
GRANTEE: GREENE KENNETH I						

BUILDING NOTES

BUILDING DIMENSIONS

BAS=[YR=2015] W14 PTO=[YR=2015] N10 W9 S10 E1 FOP=[YR=2015] S3 E7 N3 W7$ E8$ W1 S3 W7 N3 W3 U2 L2 W4 D2 L2 W19 S40 E17 N5 FOP=[YR=2015] E15 FGR=[YR=2015] S13 E20 N20FOP=[YR=2015] E2 N3 W2 S3$ N3 W20 S10$ N6 W15 S6$ N6 E15 N4 E20 N25$.

EXTRA FEATURES

LN	OB/XF CODE	DESCRIPTION	BLD	CAP	L	W	UNITS	UT	Adj R	ADJ UNIT PRICE	ORIG COND	YEAR ON	YEAR ACTUAL	Q	% COND	OB/XF MKT VALUE	NOTES
1	0810	CONCRETE A	0	100	0	0	890.00	SF	6.50	6.50	100	2015	2015	3	95	5,496	
2	0511	GARAGE CB-	0	100	20	12	240.00	SF	40.00	40.00	100	2015	2015	3	95	9,120	

LAND DESCRIPTION

TOTAL OB/XF 14,616

LN	USE CODE	CLS	LAND USE DESCRIPTION	CAP	RD	LOC ZONE	FRONT	DEPTH	TOT LND UTS	UNIT TYPE	DT	DPTH FACT	% COND	TOT ADJ	UNIT PRICE	ADJ UNIT PRICE	LAND VALUE	OTHER ADJUSTMENTS AND NOTES	YEAR	DENSITY	DECL	FRZ	YR	CONSRV
1	000100	C	SFR	100		OR	0.00	0.00	1.00	LT		1.00	1.00	1.00	60,000.00	60,000.00	60,000							

REVIEW DATE 03/26/2021 BY KBA Total Acres: 0.00 Total Land Value: 60,000 Market: 0 Agricultural: 0 Common: 60,000 PRINTED 08/06/2024 BY SYS