PT LOT 6 IN OR 2223/868 BEING
PARCEL 1
A E OGILIVIE ESTATE SUB

HC MANAGEMENT & MARKETING TRST/CHERNYAK EVGENY TRU
614 BOWLES CT
NEPTUNE BEACH, FL 32266

2024

46-2N-25-0000-0010-0090

NASSAU COUNTY PROPERTY

BUILDING CHARACTERISTICS

ELEMENT	CD	CONSTRUCTION
Exterior Wall	20	FACE BRICK 60
Exterior Wall	05	AVERAGE 40
Roof Structur	03	GABLE/HIP 100
Roof Cover	03	COMP SHNGL 100
Interior Wall	05	DRYWALL 100
Interior Floo	11	CLAY TILE 100
Air Condition	03	CENTRAL 100
Heating Type	04	AIR DUCTED 100
Bedrooms		4 100
Bathrooms		3 100
Frame	02	WOOD FRAME 100
Stories	1.	1. 100
Units		0 100
Occupancy	00	NONE 100
Quality	04	Quality Level 04

DOR CODE	0600	RETIREMENT HOMES	
MAP NUM		MKT AREA	08
NEIGHBORHOOD/LOC	8026.00		

AREA TYPE	TOTAL GROSS AREA	PCT OF BASE	TOT ADJ AREA	SUBAREA MARKET VALUE
BAS	312	100	312	41,064
BAS	2,134	100	2,134	280,867
BAS	200	100	200	26,323
BAS	600	100	600	78,969
FOP	240	30	72	9,476
FST	72	55	40	5,265
PTO	532	5	27	3,553
TOTALS	4,090		3,385	445,518

MARKET ADJUSTMENTS

TYPE	MDL	EFF. AREA	TOT ADJ PTS	EFF. BASE RATE	REPL. COST NEW	AYB	EYB	ECON	FNCT		NORM	% COND
0900	01	3,385	114.7608	143.45	485,578	1988	2010	0	0	0	8.25	91.75

1 SNGL FAM – 0% - 0 Heated Area: 3246 HX Base Yr

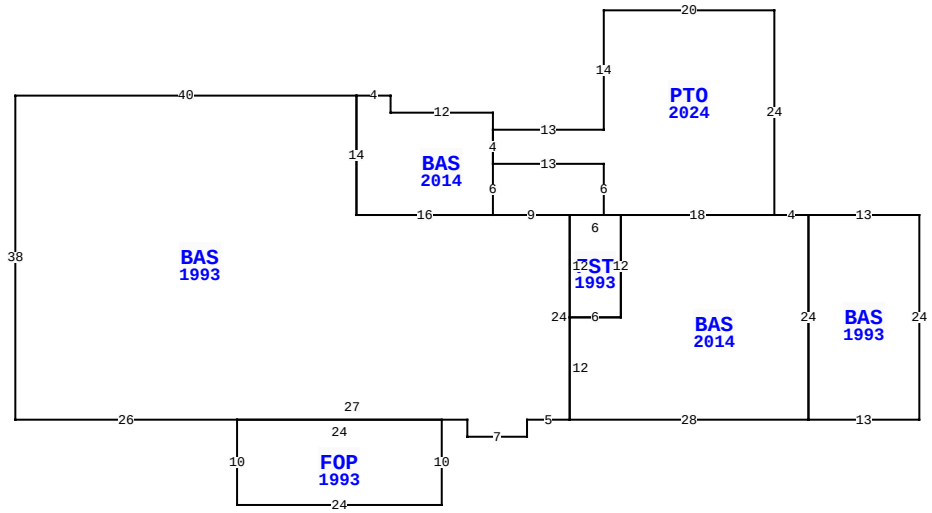

541103 LEM TURNER RD, CALLAHAN

BLD DATE	03/03/2023	NW	LGL DATE	
XF DATE			LAND DATE	01/31/2017 MF
INC DATE			AG DATE	

NASSAU COUNTY PROPERTY — VALUATION SUMMARY

VALUATION BY	STANDARD
Tax Group: 6	Tax Dist:
BUILDING MARKET VALUE	445,518
TOTAL MARKET OB/XF VALUE	21,395
TOTAL LAND VALUE - MARKET	59,040
TOTAL MARKET VALUE	525,953
SOH/AGL Deduction	103,521
ASSESSED VALUE	422,432
TOTAL EXEMPTION VALUE	0
BASE TAXABLE VALUE	422,432
TOTAL JUST VALUE	525,953
NCON VALUE	3,554
INCOME VALUE	
PREVIOUS YEAR MKT VALUE	445,210

PERMIT NUM	DESCRIPTION	AMT	ISSUED

SALES DATA

OFF RECORD Number	DATE	TYPE INST	Q / U	V / I	RSN CD	SALE PRICE
2223/0868	9/12/2018	WD	Q	I	05	309,300
GRANTOR: JOHNSON NEIL A & LIND						
GRANTEE: HC MANAGEMENT & MAR						
0976/1347	3/20/2001	WD	Q	I		170,000
GRANTOR: NELSON GARY R & MARTH						
GRANTEE: JOHNSON NEIL A & LI						

BUILDING NOTES

BUILDING DIMENSIONS

BAS=[YR=1993;ORIG=-41,0] W9 W16 N14 W40 S38 E26 E27 S2 E7 N2 E5 N24 $
BAS=[YR=2014;ORIG=-13,0] W4 W18 S12 W6 S12 E28 N24 $
BAS=[YR=1993;ORIG=0,0] W13 S24 E13 N24 $
FOP=[YR=1993;ORIG=-80,24] S10 E24 N10 W24 $
BAS=[YR=2014;ORIG=-50,0] N6 N4 N2 W12 N2 W4 S14 E16 $
FST=[YR=1993;ORIG=-35,0] W6 S12 E6 N12 $
PTO=[YR=2024;ORIG=-17,0] W18 W2 N6 W13 N4 E13 N14 E20 S24 $
.

EXTRA FEATURES

LN	OB/XF CODE	DESCRIPTION	BLD	CAP	L	W	UNITS	UT	Adj R	ADJ UNIT PRICE	ORIG COND	YEAR ON	YEAR ACTUAL	Q	% COND	OB/XF MKT VALUE	NOTES
1	0500	FP-PRE FAB	0	0	0	0	1.00	UT	3,500.00	3,500.00	100	1988	1988	3	64	2,240	
2	0511	GARAGE CB-	0	0	36	12	432.00	SF	30.00	30.00	100	1988	1988	3	54.5	7,063	
3	0681	POLE SHED	0	0	36	36	1,296.00	SF	15.00	15.00	100	1988	1988	3	20	3,888	
4	0803	ASPHALT C	0	0	0	0	8,116.00	SF	1.80	1.80	100	1993	1993	3	50	7,304	
5	0681	POLE SHED	0	0	20	12	240.00	SF	15.00	15.00	100	1997	1997	3	25	900	

LAND DESCRIPTION

TOTAL OB/XF 21,395

LN	USE CODE	CLS	LAND USE DESCRIPTION	CAP	RD	LOC ZONE	FRONT	DEPTH	TOT LND UTS	UNIT TYPE	DT	DPTH FACT	% COND	TOT ADJ	UNIT PRICE	ADJ UNIT PRICE	LAND VALUE	OTHER ADJUSTMENTS AND NOTES	YEAR	DENSITY	DECL	FRZ	YR	CONSRV
1	000600	C	RETIREMENT	0	0004	OR	0.00	0.00	4.10	AC		1.00	1.00	0.80	18,000.00	14,400.00	59,040							

REVIEW DATE 04/05/2024 BY TWA Total Acres: 4.10 Total Land Value: 59,040 Market: 0 Agricultural: 0 Common: 59,040 PRINTED 08/06/2024 BY SYS