IN OR 1529/1724
ESMT OR 1639/932

MITCHELL AURLIEAN & ANN
PO BOX 1991
CALLAHAN, FL 32011

2024

46-2N-25-0000-0002-0290

BUILDING CHARACTERISTICS

ELEMENT	CD	CONSTRUCTION
Exterior Wall	15	CONC BLOCK 100
Roof Structur	03	GABLE/HIP 100
Roof Cover	03	COMP SHNGL 100
Interior Wall	05	DRYWALL 100
Interior Floo	11	CLAY TILE 70
Interior Floo	14	CARPET 30
Air Condition	03	CENTRAL 100
Heating Type	04	AIR DUCTED 100
Bedrooms		4 100
Bathrooms		3.5 100
Frame	02	WOOD FRAME 100
Stories	0	0 100
Units		0 100
Occupancy	00	NONE 100
Quality	03	Quality Level 03
DOR CODE	0100	SINGLE FAMILY
MAP NUM		MKT AREA 08
NEIGHBORHOOD/LOC	8026.00	

AREA TYPE	TOTAL GROSS AREA	PCT OF BASE	TOT ADJ AREA	SUBAREA MARKET VALUE
BAS	2,975	100	2,975	405,951
FGR	643	55	354	48,305
FOP	222	30	67	9,142
FOP	719	30	216	29,474
PTO	80	5	4	546
STP	28	10	3	410
STP	30	10	3	410
UUS	624	50	312	42,573
TOTALS	5,321		3,934	536,810

MARKET ADJUSTMENTS

TYPE	MDL	EFF. AREA	TOT ADJ PTS	EFF. BASE RATE	REPL. COST NEW	AYB	EYB	ECON	FNCT		NORM	% COND
0500	01	3,934	97.2900	145.94	574,128	2010	2010	0	0	0	6.50	93.50

1 SFR CUST – 100% - 2011 Heated Area: 2975 HX Base Yr 2011

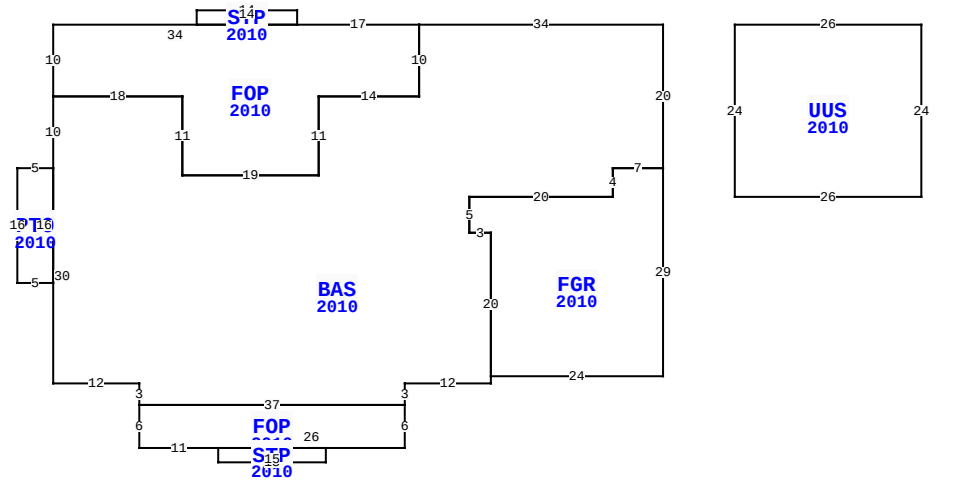

55099 SPENCERVILLE RD, CALLAHAN

BLD DATE	03/03/2023 NW	LGL DATE	
XF DATE		LAND DATE	05/19/2023 MLU
INC DATE		AG DATE	

NASSAU COUNTY PROPERTY

PAGE 1 of 1 6

VALUATION SUMMARY

VALUATION BY		STANDARD
Tax Group: 6	Tax Dist:	
BUILDING MARKET VALUE		536,810
TOTAL MARKET OB/XF VALUE		53,707
TOTAL LAND VALUE - MARKET		80,320
TOTAL MARKET VALUE		670,837
SOH/AGL Deduction		374,780
ASSESSED VALUE		296,057
TOTAL EXEMPTION VALUE	HX HB	50,000
BASE TAXABLE VALUE		246,057
TOTAL JUST VALUE		670,837
NCON VALUE		0
INCOME VALUE		
PREVIOUS YEAR MKT VALUE		541,320

PERMIT NUM	DESCRIPTION	AMT	ISSUED
19009849	SWIM POOL	38,000	09/18/2019
C22064	CO ISSUED	0	08/01/2010
R12179	REPAIR/RRF	3,000	11/01/2009
M14685	MECH OTHER	0	07/01/2009
E21511	ELEC OTHER	800	12/01/2008
P13608	OTHER	0	12/01/2008

SALES DATA

OFF RECORD Number	DATE	TYPE INST	Q U	V I	RSN CD	SALE PRICE
1529/1724	10/10/2007	WD	Q	V		85,000
GRANTOR: CHEWNING CARLTON J						
GRANTEE: MITCHELL AURLIEAN &						
1529/1723	10/10/2007	WD	U	V	10	100
GRANTOR: SPENCER WAYNE K & CLA						
GRANTEE: CHEWNING CARLTON J						

BUILDING NOTES

BUILDING DIMENSIONS

BAS=[YR=2010] W34 FOP=[YR=2010] W17 STP=[YR=2010] N2 W14 S2 E14$ W34 S10 E18 S11 E19 N11 E14 N10$ S10 W14 S11 W19 N11 W18 S10 PTO=[YR=2010] W5 S16 E5 N16$ S30E12 S3 FOP=[YR=2010] S6 E11 STP=[YR=2010] S2 E15 N2 W15$ E26 N6 W37$ E37 N3 E12 N1 FGR=[YR=2010] E24 N29 W7 S4 W20 S5 E3 S20$ N20 W3 N5 E20 N4 E7 N20$ PTR=[YR=2010] E10 UUS=[YR=2010] E26 S24 W26 N24$ W10$.

EXTRA FEATURES

LN	OB/XF CODE	DESCRIPTION	BLD	CAP	L	W	UNITS	UT	Adj R	ADJ UNIT PRICE	ORIG COND	YEAR ON	YEAR ACTUAL	Q	% COND	OB/XF MKT VALUE	NOTES
1	0812	CONCRETE C	0	100	0	0	2,267.00	SF	4.00	4.00	100	2010	2010	3	91	8,252	
2	1123	CB 8"	0	100	20	8	160.00	SF	6.15	6.15	100	2010	2010	3	91	895	
3	0861	POOL GUNIT	0	100	30	16	480.00	SF	85.00	85.00	100	2019	2019	3	90	36,720	
4	0855	CONC PAVER	0	100	0	0	800.00	SF	10.00	10.00	100	2019	2019	3	98	7,840	

LAND DESCRIPTION

TOTAL OB/XF 53,707

LN	USE CODE	CLS	LAND USE DESCRIPTION	CAP	RD	LOC ZONE	FRONT	DEPTH	TOT LND UTS	UNIT TYPE	DT	DPTH FACT	% COND	TOT ADJ	UNIT PRICE	ADJ UNIT PRICE	LAND VALUE	OTHER ADJUSTMENTS AND NOTES	YEAR	DENSITY	DECL	FRZ	YR	CONSRV
1	000115	C	SFR ACRES	100	0007	OR	0.00	0.00	5.02	AC		1.00	1.00	1.00	16,000.00	16,000.00	80,320							

REVIEW DATE 05/18/2020 BY KBA Total Acres: 5.02 Total Land Value: 80,320 Market: 0 Agricultural: 0 Common: 80,320 PRINTED 08/06/2024 BY SYS