CASE #2007-CP-22 OR 1547/220 &
IN OR 1557/1257

TOUNDAS PATRICIA I
96213 BLACKROCK ROAD
YULEE, FL 32097

2024

45-3N-28-0000-0001-0010

NASSAU COUNTY PROPERTY

BUILDING CHARACTERISTICS

ELEMENT	CD	CONSTRUCTION
Exterior Wall	19	COMMON BRK 90
Exterior Wall	05	AVERAGE 10
Roof Structur	03	GABLE/HIP 100
Roof Cover	03	COMP SHNGL 100
Interior Wall	05	DRYWALL 100
Interior Floo	12	HARDWOOD 100
Air Condition	03	CENTRAL 100
Heating Type	04	AIR DUCTED 100
Bedrooms		3 100
Bathrooms		1.5 100
Frame	03	MASONRY 100
Stories	1.	1. 100
Units		0 100
BUD8 Adjustme	04	DIST 01 100
Occupancy	00	NONE 100
Quality	05	Quality Level 05
DOR CODE	0100	SINGLE FAMILY
MAP NUM		MKT AREA 04
NEIGHBORHOOD/LOC	4031.00	

AREA TYPE	TOTAL GROSS AREA	PCT OF BASE	TOT ADJ AREA	SUBAREA MARKET VALUE
BAS	1,311	100	1,311	115,630
BAS	105	100	105	9,261
BAS	156	100	156	13,759
BAS	336	100	336	29,635
FOP	45	30	14	1,235
TOTALS	1,953		1,922	169,520

MARKET ADJUSTMENTS

TYPE	MDL	EFF. AREA	TOT ADJ PTS	EFF. BASE RATE	REPL. COST NEW	AYB	EYB	ECON	FNCT		NORM	% COND
0100	01	1,922	132.9174	126.27	242,691	1968	1980	0	0	0	30.15	69.85

1 SINGLE FAM – 100% - 2008 Heated Area: 1908 HX Base Yr 2008

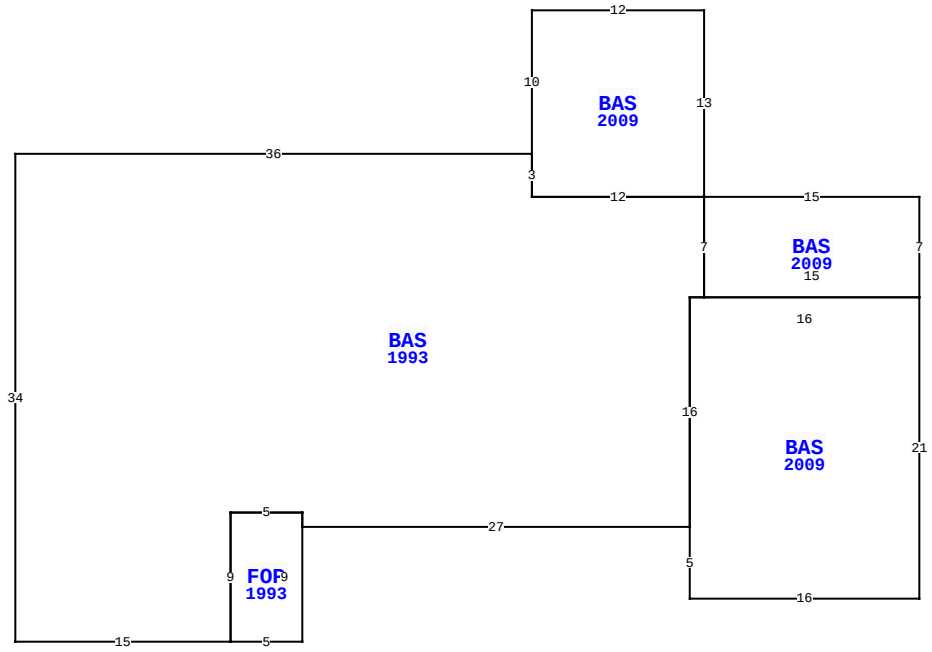

96213 BLACKROCK RD, YULEE

BLD DATE		LGL DATE	
XF DATE		LAND DATE	06/20/2023 MLU
INC DATE		AG DATE	

VALUATION SUMMARY

VALUATION BY		STANDARD
Tax Group: 4	Tax Dist:	
BUILDING MARKET VALUE		169,520
TOTAL MARKET OB/XF VALUE		0
TOTAL LAND VALUE - MARKET		160,000
TOTAL MARKET VALUE		329,520
SOH/AGL Deduction		191,719
ASSESSED VALUE		137,801
TOTAL EXEMPTION VALUE	HX HB	50,000
BASE TAXABLE VALUE		87,801
TOTAL JUST VALUE		329,520
NCON VALUE		0
INCOME VALUE		
PREVIOUS YEAR MKT VALUE		322,132

PERMIT NUM	DESCRIPTION	AMT	ISSUED

SALES DATA

OFF RECORD Number	DATE	TYPE INST	Q U /	V I /	RSN CD	SALE PRICE
1557/1257	3/26/2008	QC	U	I	01	100
GRANTOR: TOUNDAS PATRICIA C						
GRANTEE: TOUNDAS PATRICIA I						
0134/0002	1/01/1972	TA	Q	I		32,000
GRANTOR:						
GRANTEE:						

BUILDING NOTES

BUILDING DIMENSIONS

BAS=[YR=2009] W15 BAS=[YR=2009] N13 W12 S10 BAS=[YR=1993] W36 S34 E15 FOP=[YR=1993] E5 N9 W5 S9 $ N9 E5 S1 E27 BAS=[YR=2009] S5 E16 N21 W16 S16 $ N16 E1 N7 W12 N3 $ S3 E12 $ S7 E15 N7 $.

EXTRA FEATURES

LN	OB/XF CODE	DESCRIPTION	BLD	CAP	L	W	UNITS	UT	Adj R	ADJ UNIT PRICE	ORIG COND	YEAR ON	YEAR ACTUAL	Q	% COND	OB/XF MKT VALUE	NOTES

LAND DESCRIPTION

TOTAL OB/XF 0

LN	USE CODE	CLS	LAND USE DESCRIPTION	CAP	RD	LOC ZONE	FRONT	DEPTH	TOT LND UTS	UNIT TYPE	DT	DPTH FACT	% COND	TOT ADJ	UNIT PRICE	ADJ UNIT PRICE	LAND VALUE	OTHER ADJUSTMENTS AND NOTES	YEAR	DENSITY	DECL	FRZ	YR	CONSRV
1	000115	C	SFR ACRES	100	0006	OR	0.00	0.00	2.00	AC		1.00	1.00	1.00	80,000.00	80,000.00	160,000							

REVIEW DATE 07/14/2020 BY KWA Total Acres: 2.00 Total Land Value: 160,000 Market: 0 Agricultural: 0 Common: 160,000 PRINTED 08/06/2024 BY SYS