LOT 1
IN OR 1776/1325
F/K/A PT OF LOT 26 (S-1)

JOHNSON PAMELA W
95084 TURTLE LANE
FERNANDINA BEACH, FL 32034

2024

45-2N-28-535J-0001-0000

BUILDING CHARACTERISTICS

ELEMENT	CD	CONSTRUCTION
Exterior Wall	10	ABOVE AVG 100
Roof Structur	03	GABLE/HIP 100
Roof Cover	03	COMP SHNGL 100
Interior Wall	05	DRYWALL 100
Interior Floo	12	HARDWOOD 100
Air Condition	03	CENTRAL 100
Heating Type	04	AIR DUCTED 100
Bedrooms		4 100
Bathrooms		3.5 100
Frame	02	WOOD FRAME 100
Stories	2.	2. 100
Units		0 100
Occupancy	00	NONE 100
Quality	02	Quality Level 02

DOR CODE 0100 SINGLE FAMILY
MAP NUM | MKT AREA 04
NEIGHBORHOOD/LOC 4004.00

AREA TYPE	TOTAL GROSS AREA	PCT OF BASE	TOT ADJ AREA	SUBAREA MARKET VALUE
BAS	672	100	672	86,085
BAS	288	100	288	36,894
DCK	144	10	14	1,794
FGR	480	55	264	33,819
FOP	168	30	50	6,406
FUS	672	100	672	86,085
STR	32	10	3	384
TOTALS	2,456		1,963	251,467

MARKET ADJUSTMENTS

TYPE	MDL	EFF. AREA	TOT ADJ PTS	EFF. BASE RATE	REPL. COST NEW	AYB	EYB	ECON	FNCT		NORM	% COND
0900	01	1,963	110.7890	138.49	271,856	2007	2007	0	0	0	7.50	92.50

1 SNGL FAM – 0% - 0 Heated Area: 1632 HX Base Yr

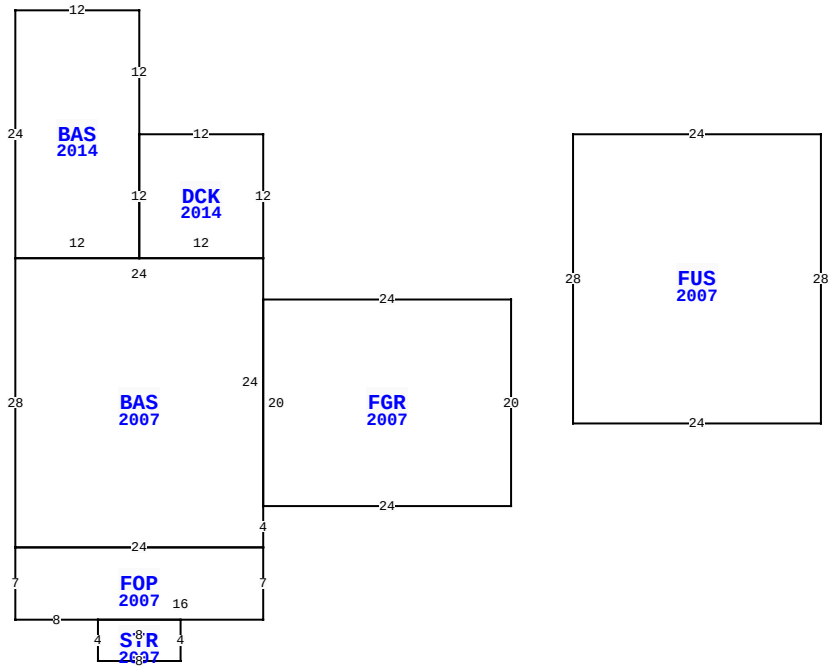

95081 TURTLE LN, FERNANDINA BEACH

BLD DATE	03/03/2023 NW	LGL DATE	
XF DATE		LAND DATE	05/30/2023 MLU
INC DATE		AG DATE	

NASSAU COUNTY PROPERTY

PAGE 1 of 1 4

VALUATION SUMMARY

VALUATION BY	STANDARD
Tax Group: 4	Tax Dist:
BUILDING MARKET VALUE	251,467
TOTAL MARKET OB/XF VALUE	0
TOTAL LAND VALUE - MARKET	124,650
TOTAL MARKET VALUE	376,117
SOH/AGL Deduction	78,043
ASSESSED VALUE	298,074
TOTAL EXEMPTION VALUE	0
BASE TAXABLE VALUE	298,074
TOTAL JUST VALUE	376,117
NCON VALUE	0
INCOME VALUE	
PREVIOUS YEAR MKT VALUE	364,824

PERMIT NUM	DESCRIPTION	AMT	ISSUED
E19796	ELEC OTHER	3,500	08/01/2007
M13105	MECH OTHER	0	07/01/2007
P12556	OTHER	0	07/01/2007
C19960	CO ISSUED	0	05/01/2007
B19960	NEW CONSTR	140,000	05/01/2007
R10397	REPAIR/RRF	2,000	05/01/2007

SALES DATA

OFF RECORD Number	DATE	TYPE INST	Q / U	V / I	RSN CD	SALE PRICE
1776/1325	1/24/2012	WD	U	I	30	15,000

GRANTOR: JOHNSON THAD O & JENN
GRANTEE: JOHNSON STEPHEN C &

BUILDING NOTES

BUILDING DIMENSIONS

DCK=[YR=2014] W12 BAS=[YR=2014] N12 W12 S24 BAS=[YR=2007] S28 FOP=[YR=2007] S7 E8 STR=[YR=2007] S4 E8 N4W8$ E16 N7 W24$ E24 N4 FGR=[YR=2007] E24 N20 W24 S20$ N24 W24$ E12 N12$ S12 E12 N12$ PTR=E30 FUS=[YR=2007] E24 S28 W24 N28$ W30$.

EXTRA FEATURES

L N	OB/XF CODE	DESCRIPTION	BLD	CAP	L	W	UNITS	UT	Adj R	ADJ UNIT PRICE	ORIG COND	YEAR ON	YEAR ACTUAL	Q	% COND	OB/XF MKT VALUE	NOTES

LAND DESCRIPTION

TOTAL OB/XF 0

L N	USE CODE	CLS	LAND USE DESCRIPTION	CAP	R D	LOC ZONE	FRONT	DEPTH	TOT LND UTS	UNIT TYPE	D T	DPTH FACT	% COND	TOT ADJ	UNIT PRICE	ADJ UNIT PRICE	LAND VALUE	OTHER ADJUSTMENTS AND NOTES	YEAR	DENSITY	DECL	FRZ	YR	CONSRV
1	000115	C	SFR ACRES	0		OR	0.00	0.00	2.77	AC		1.00	1.00	0.60	75,000.00	45,000.00	124,650							

REVIEW DATE 12/03/2020 BY KWA Total Acres: 2.77 Total Land Value: 124,650 Market: 0 Agricultural: 0 Common: 124,650 PRINTED 08/06/2024 BY SYS