S 150 FT OF LOT 11
IN OR 2279/189
CHRISTOPHER CREEK ESTATES

PEREZ FAMILY TRUST/PEREZ CAROLS TROY TRUSTEE
940496 OLD NASSAUVILLE RD
FERNANDINA BEACH, FL 32034

2024

45-2N-28-5240-0011-0000

BUILDING CHARACTERISTICS

ELEMENT	CD	CONSTRUCTION
Exterior Wall	20	FACE BRICK 100
Roof Structur	08	IRREGULAR 100
Roof Cover	03	COMP SHNGL 100
Interior Wall	05	DRYWALL 100
Interior Floo	12	HARDWOOD 80
Interior Floo	11	CLAY TILE 20
Air Condition	03	CENTRAL 100
Heating Type	04	AIR DUCTED 100
Bedrooms		4 100
Bathrooms		2.5 100
Frame	02	WOOD FRAME 100
Stories	1.5	1.5 100
Units		0 100
Occupancy	00	NONE 100
Quality	04	Quality Level 04
DOR CODE	0100	SINGLE FAMILY
MAP NUM		MKT AREA 04
NEIGHBORHOOD/LOC	4005.00	

AREA TYPE	TOTAL GROSS AREA	PCT OF BASE	TOT ADJ AREA	SUBAREA MARKET VALUE
BAS	2,285	100	2,285	284,343
DCK	612	10	61	7,590
FGR	528	55	290	36,087
FOP	348	30	104	12,941
FOP	352	30	106	13,190
FUS	144	100	144	17,919
STR	54	10	5	622
TOTALS	4,323		2,995	372,695

MARKET ADJUSTMENTS

TYPE	MDL	EFF. AREA	TOT ADJ PTS	EFF. BASE RATE	REPL. COST NEW	AYB	EYB	ECON	FNCT		NORM	% COND
0900	01	2,995	115.0842	143.86	430,861	1995	2005	0	0	0	13.50	86.50

1 SNGL FAM – 100% - 2023 Heated Area: 2429 HX Base Yr 2023

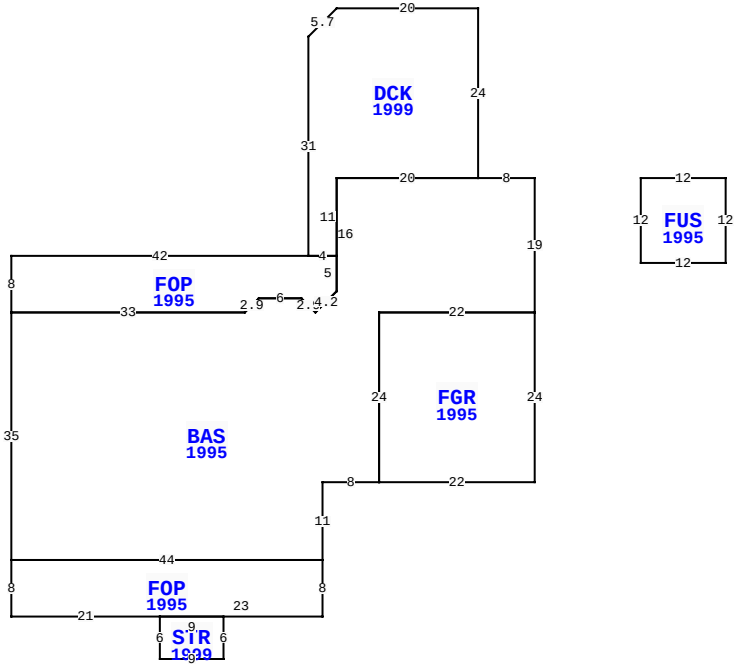

940496 OLD NASSAUVILLE RD, FERNANDINA BEACH

BLD DATE		LGL DATE	
XF DATE		LAND DATE	05/30/2023 MLU
INC DATE		AG DATE	

NASSAU COUNTY PROPERTY

PAGE 1 of 2 4

VALUATION SUMMARY

VALUATION BY		STANDARD
Tax Group: 4	Tax Dist:	
BUILDING MARKET VALUE		372,695
TOTAL MARKET OB/XF VALUE		60,091
TOTAL LAND VALUE - MARKET		450,000
TOTAL MARKET VALUE		882,786
SOH/AGL Deduction		0
ASSESSED VALUE		882,786
TOTAL EXEMPTION VALUE	HX HB	50,000
BASE TAXABLE VALUE		832,786
TOTAL JUST VALUE		882,786
NCON VALUE		0
INCOME VALUE		
PREVIOUS YEAR MKT VALUE		944,227

PERMIT NUM	DESCRIPTION	AMT	ISSUED
B2002718	REMODEL	150,000	08/01/2020
M1706422	H/AC	0	10/01/2017
B0108436	XFOB	9,000	06/01/2001
996478	SWIM POOL	18,000	10/01/1999
7842	XFOB	119,000	02/13/1992

SALES DATA

OFF RECORD Number	DATE	TYPE INST	Q U	V I	RSN CD	SALE PRICE
2279/0189	6/05/2019	WD	Q	I	01	531,000
GRANTOR: PANKE RUSSELL E & BRE						
GRANTEE: PEREZ FAMILY TRUST						
0728/0633	4/26/1995	WD	Q	V		70,000
GRANTOR: DOUGLAS ARTHUR B & BA						
GRANTEE: PANKE RUSSELL E & B						

BUILDING NOTES

BUILDING DIMENSIONS

BAS=[YR=1995] W8 DCK=[YR=1999] N24 W20 L4 D4 S31
FOP=[YR=1995] W42 S8 E33 U2 R2 E6 D2 R2 R3 U3 N5 W4$
E4 N11 E20$ W20 S16 D3 L3 L2 U2 W6 D2 L2 W33 S35
FOP=[YR=1995] S8 E21 STR=[YR=1999] S6 E9 N6 W9 $ E23 N8 W44
$ E44 N11 E8 FGR=[YR=1995] E22 N24 W22 S24 $ N24 E22 N19 $
PTR= E15 FUS=[YR=1995] E12 S12 W12 N12 $ W15 $.

EXTRA FEATURES

LN	OB/XF CODE	DESCRIPTION	BLD	CAP	L	W	UNITS	UT	Adj R	ADJ UNIT PRICE	ORIG COND	YEAR ON	YEAR ACTUAL	Q	% COND	OB/XF MKT VALUE	NOTES
1	0350	CARPORT WD	0	100	14	40	560.00	SF	13.00	13.00	100	1992	1992	3	20	1,456	
2	0940	SHEDS/PORT	0	100	12	16	192.00	SF	30.00	30.00	100	1994	1994	3	20	1,152	
3	0350	CARPORT WD	0	100	12	12	144.00	SF	13.00	13.00	100	1994	1994	3	20	374	
4	0812	CONCRETE C	0	100	0	0	1,118.00	SF	4.00	4.00	100	1995	1995	3	70	3,130	
5	0861	POOL GUNIT	0	100	36	18	648.00	SF	85.00	85.00	100	1999	1999	3	23	12,668	
6	0845	KOOL DECK	0	100	0	0	1,269.00	SF	7.25	7.25	100	1999	1999	3	77	7,084	
7	0317	DCK PLNG W	0	100	0	0	2.00	UT	1,000.00	1,000.00	100	1999	1999	3	20	400	
8	0323	BOAT LFT H	0	100	0	0	1.00	UT	2,500.00	2,500.00	100	1999	1999	3	20	500	
9	0350	CARPORT WD	0	100	28	12	336.00	SF	13.00	13.00	100	1999	1999	3	20	874	
10	0302	FLT DOCK C	0	100	24	8	192.00	SF	50.00	50.00	100	1999	1999	3	20	1,920	

TOTAL OB/XF 29,558

LAND DESCRIPTION

LN	USE CODE	CLS	LAND USE DESCRIPTION	CAP	RD	LOC ZONE	FRONT	DEPTH	TOT LND UTS	UNIT TYPE	DT	DPTH FACT	% COND	TOT ADJ	UNIT PRICE	ADJ UNIT PRICE	LAND VALUE	OTHER ADJUSTMENTS AND NOTES	YEAR	DENSITY	DECL	FRZ	YR	CONSRV
1	000130	C	SFR WATER	100		RSF-1	150.00	300.00	150.00	FF		1.00	1.00	1.00	3,000.00	3,000.00	450,000							

REVIEW DATE 02/08/2022 BY KW Total Acres: 0.00 Total Land Value: 450,000 Market: 0 Agricultural: 0 Common: 450,000 PRINTED 08/06/2024 BY SYS

S 150 FT OF LOT 11
IN OR 2279/189
CHRISTOPHER CREEK ESTATES

PEREZ FAMILY TRUST/PEREZ CAROLS TROY TRUSTEE
940496 OLD NASSAUVILLE RD
FERNANDINA BEACH, FL 32034

2024

45-2N-28-5240-0011-0000

NASSAU COUNTY PROPERTY

BUILDING CHARACTERISTICS

ELEMENT	CD	CONSTRUCTION

DOR CODE	0100	SINGLE FAMILY	
MAP NUM		MKT AREA	04
NEIGHBORHOOD/LOC	4005.00		

AREA TYPE	TOTAL GROSS AREA	PCT OF BASE	TOT ADJ AREA	SUBAREA MARKET VALUE
TOTALS				

MARKET ADJUSTMENTS

TYPE	MDL	EFF. AREA	TOT ADJ PTS	EFF. BASE RATE	REPL. COST NEW	AYB	EYB	ECON	FNCT		NORM	% COND

VALUATION SUMMARY

VALUATION BY		STANDARD
Tax Group: 4	Tax Dist:	
BUILDING MARKET VALUE		372,695
TOTAL MARKET OB/XF VALUE		60,091
TOTAL LAND VALUE - MARKET		450,000
TOTAL MARKET VALUE		882,786
SOH/AGL Deduction		0
ASSESSED VALUE		882,786
TOTAL EXEMPTION VALUE	HX HB	50,000
BASE TAXABLE VALUE		832,786
TOTAL JUST VALUE		882,786
NCON VALUE		0
INCOME VALUE		
PREVIOUS YEAR MKT VALUE		944,227

PERMIT NUM	DESCRIPTION	AMT	ISSUED

BLD DATE		LGL DATE	
XF DATE		LAND DATE	05/30/2023 MLU
INC DATE		AG DATE	

SALES DATA

OFF RECORD Number	DATE	TYPE INST	Q / U	V / I	RSN CD	SALE PRICE
2279/0189	6/05/2019	WD	Q	I	01	531,000
GRANTOR: PANKE RUSSELL E & BRE						
GRANTEE: PEREZ FAMILY TRUST						
0728/0633	4/26/1995	WD	Q	V		70,000
GRANTOR: DOUGLAS ARTHUR B & BA						
GRANTEE: PANKE RUSSELL E & B						

BUILDING NOTES

BUILDING DIMENSIONS

EXTRA FEATURES

LN	OB/XF CODE	DESCRIPTION	BLD	CAP	L	W	UNITS	UT	Adj R	ADJ UNIT PRICE	ORIG COND	YEAR ON	YEAR ACTUAL	Q	% COND	OB/XF MKT VALUE	NOTES
11	0810	CONCRETE A	0	100	0	0	227.00	SF	6.50	6.50	100	1999	1999	3	77	1,136	
12	0300	BOAT DCK W	0	100	0	0	672.00	SF	40.00	40.00	100	1999	1999	3	27	7,258	
13	0810	CONCRETE A	0	100	0	0	2,688.00	SF	6.50	6.50	100	1999	1999	3	77	13,453	
14	0911	SCRN RM A	0	100	44	55	2,420.00	SF	17.50	17.50	100	2001	2001	3	20	8,470	
15	0311	WD GANG WY	0	100	0	0	24.00	SF	45.00	45.00	100	1999	1999	3	20	216	

LAND DESCRIPTION

TOTAL OB/XF 30,533

LN	USE CODE	CLS	LAND USE DESCRIPTION	CAP	RD	LOC ZONE	FRONT	DEPTH	TOT LND UTS	UNIT TYPE	DT	DPTH FACT	% COND	TOT ADJ	UNIT PRICE	ADJ UNIT PRICE	LAND VALUE	OTHER ADJUSTMENTS AND NOTES	YEAR	DENSITY	DECL	FRZ	YR	CONSRV

REVIEW DATE 02/08/2022 BY KW Total Acres: 0.00 Total Land Value: 450,000 Market: 0 Agricultural: 0 Common: 450,000 PRINTED 08/06/2024 BY SYS