PT JOHN CHISTOPHER GRANT
SEC 45-2N-28E IN OR 2701/863

NEASE LIVING TRUST/NEASE STEPHEN E TRUSTEE
940377 OLD NASSAUVILLE RD
FERNANDINA BEACH, FL 32034

2024

45-2N-28-0000-0010-0050

NASSAU COUNTY PROPERTY

BUILDING CHARACTERISTICS

ELEMENT	CD	CONSTRUCTION
Exterior Wall	31	HARDIE BRD 100
Roof Structur	03	GABLE/HIP 100
Roof Cover	03	COMP SHNGL 100
Interior Wall	05	DRYWALL 100
Interior Floo	13	LVT/LAMNT 90
Interior Floo	11	CLAY TILE 10
Air Condition	03	CENTRAL 100
Heating Type	04	AIR DUCTED 100
Bedrooms		3 100
Bathrooms		2 100
Frame	02	WOOD FRAME 100
Stories	2.	2. 100
Units		0 100
Occupancy	00	NONE 100
Quality	03	Quality Level 03
DOR CODE	0100	SINGLE FAMILY
MAP NUM		MKT AREA 04
NEIGHBORHOOD/LOC	4005.00	

AREA TYPE	TOTAL GROSS AREA	PCT OF BASE	TOT ADJ AREA	SUBAREA MARKET VALUE
BAS	2,157	100	2,157	321,781
FGR	748	55	411	61,313
FOP	80	30	24	3,580
FOP	204	30	61	9,100
FSP	270	40	108	16,111
FUS	464	100	464	69,220
PTO	66	5	3	448
STR	21	10	2	298
TOTALS	4,010		3,230	481,851

MARKET ADJUSTMENTS

TYPE	MDL	EFF. AREA	TOT ADJ PTS	EFF. BASE RATE	REPL. COST NEW	AYB	EYB	ECON	FNCT		NORM	% COND
0500	01	3,230	99.4520	149.18	481,851	2022	2022	0	0	0	0.00	100.00

1 SFR CUST – 100% - 2023 Heated Area: 2621 HX Base Yr 2023

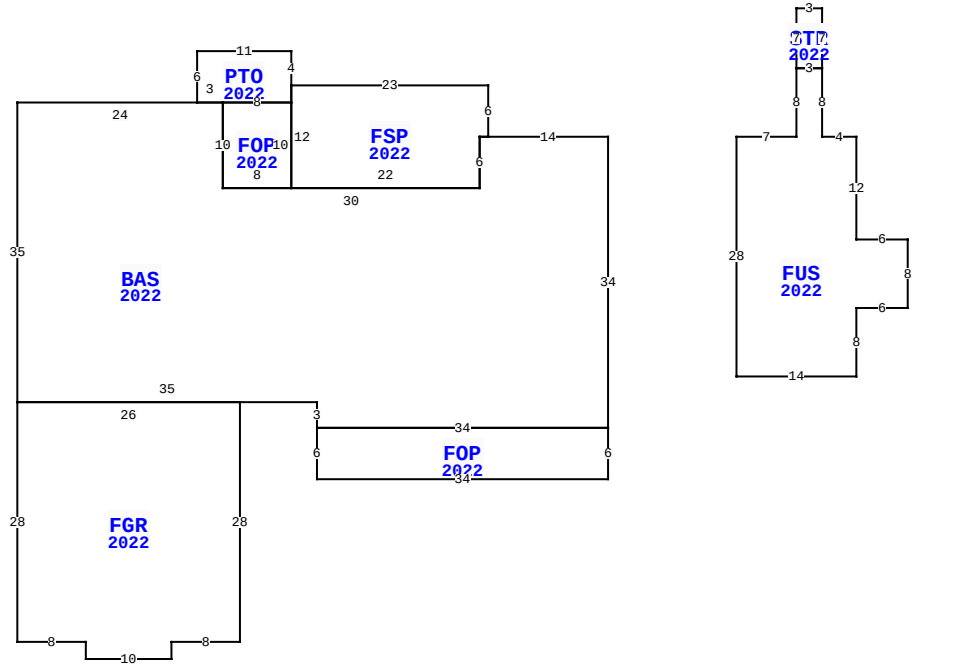

940377 OLD NASSAUVILLE RD, FERNANDINA BEACH

BLD DATE		LGL DATE	
XF DATE		LAND DATE	05/30/2023 MLU
INC DATE		AG DATE	

VALUATION SUMMARY

VALUATION BY		STANDARD
Tax Group: 4	Tax Dist:	
BUILDING MARKET VALUE		517,360
TOTAL MARKET OB/XF VALUE		6,490
TOTAL LAND VALUE - MARKET		101,250
TOTAL MARKET VALUE		625,100
SOH/AGL Deduction		281,136
ASSESSED VALUE		343,964
TOTAL EXEMPTION VALUE	HX HB	50,000
BASE TAXABLE VALUE		293,964
TOTAL JUST VALUE		625,100
NCON VALUE		0
INCOME VALUE		
PREVIOUS YEAR MKT VALUE		524,712

PERMIT NUM	DESCRIPTION	AMT	ISSUED
22018769	CO ISSUED	0	12/22/2022
21017755	GARAGE	100,598	12/23/2021
B2116625	NEW CONSTR	444,182	12/01/2021

SALES DATA

OFF RECORD Number	DATE	TYPE INST	Q / U	V / I	RSN CD	SALE PRICE
2701/863	2/28/2024	WD	U	I	11	100
GRANTOR: NEASE STEVE E & LAURA						
GRANTEE: NEASE LIVING TRUST						
1601/0250	1/16/2009	QC	U	V	19	100
GRANTOR: NEASE STEVE E & LAURA						
GRANTEE: NEASE STEVE E & LAU						

BUILDING NOTES

BUILDING DIMENSIONS

BAS=[YR=2022] W14 FSP=[YR=2022] N6 W23 PTO=[YR=2022] N4 W11 S6 E3 FOP=[YR=2022] S10 E8 N10 W8$ E8 N2$ S12 E22 N6 E1$ W1 S6 W30 N10 W24 S35 FGR=[YR=2022] S28 E8 S2 E10 N2 E8 N28 W26$ E35 S3 FOP=[YR=2022] S6 E34 N6 W34$ E34 N34$ PTR=E15 FUS=[YR=2022] E7 N8 STR=[YR=2022] N7E3S7W3 $ E3 S8 E4 S12 E6 S8 W6 S8 W14 N28$ W15$.

EXTRA FEATURES

LN	OB/XF CODE	DESCRIPTION	BLD	CAP	L	W	UNITS	UT	Adj R	ADJ UNIT PRICE	ORIG COND	YEAR ON	YEAR ACTUAL	Q	% COND	OB/XF MKT VALUE	NOTES
1	0810	CONCRETE A	0	100	0	0	440.00	SF	6.50	6.50	100	2022	2022	3	100	2,860	
2	0811	CONCRETE B	0	100	0	0	698.00	SF	5.20	5.20	100	2022	2022	3	100	3,630	

LAND DESCRIPTION

TOTAL OB/XF 6,490

LN	USE CODE	CLS	LAND USE DESCRIPTION	CAP	RD	LOC ZONE	FRONT	DEPTH	TOT LND UTS	UNIT TYPE	DT	DPTH FACT	% COND	TOT ADJ	UNIT PRICE	ADJ UNIT PRICE	LAND VALUE	OTHER ADJUSTMENTS AND NOTES	YEAR	DENSITY	DECL	FRZ	YR	CONSRV
1	000115	C	SFR ACRES	100		OR	0.00	0.00	1.35	AC		1.00	1.00	1.00	75,000.00	75,000.00	101,250							

REVIEW DATE 01/08/2023 BY DJ Total Acres: 1.35 Total Land Value: 101,250 Market: 0 Agricultural: 0 Common: 101,250 PRINTED 08/06/2024 BY SYS

PT JOHN CHISTOPHER GRANT
SEC 45-2N-28E IN OR 2701/863

NEASE LIVING TRUST/NEASE STEPHEN E TRUSTEE
940377 OLD NASSAUVILLE RD
FERNANDINA BEACH, FL 32034

2024

45-2N-28-0000-0010-0050

NASSAU COUNTY PROPERTY

BUILDING CHARACTERISTICS

ELEMENT	CD	CONSTRUCTION
Exterior Wall	25	MOD METAL 100
Roof Structur	10	STEEL FRME 100
Roof Cover	12	MODULAR MT 100
Interior Wall	01	MINIMUM 100
Interior Floo	03	CONC FINSH 100
Air Condition	99	N/A 100
Heating Type	01	NONE 100
Bedrooms		0 100
Bathrooms		0 100
Frame	05	STEEL 100
Stories	0	0 100
Units		0 100
Occupancy	00	NONE 100
Quality	03	Quality Level 03

DOR CODE 0100 SINGLE FAMILY
MAP NUM | MKT AREA 04
NEIGHBORHOOD/LOC 4005.00

AREA TYPE	TOTAL GROSS AREA	PCT OF BASE	TOT ADJ AREA	SUBAREA MARKET VALUE
BAS	1,680	100	1,680	35,509
TOTALS	1,680		1,680	35,509

MARKET ADJUSTMENTS

TYPE	MDL	EFF. AREA	TOT ADJ PTS	EFF. BASE RATE	REPL. COST NEW	AYB	EYB	ECON	FNCT		NORM	% COND
6500	01	1,680	61.0000	21.35	35,868	2022	2022	0	0	0	1.00	99.00

2 GARAGE RES – 100% - 2023 Heated Area: 1680 HX Base Yr 2023

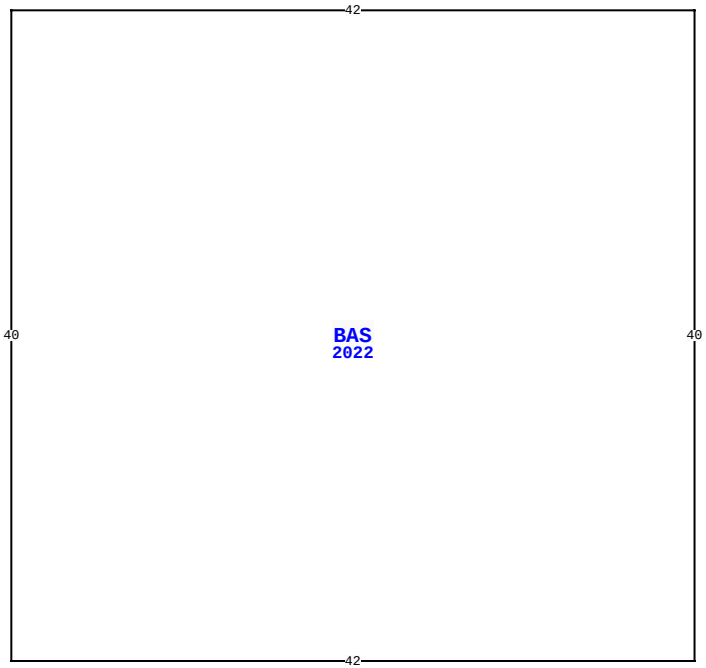

940377 OLD NASSAUVILLE RD, FERNANDINA BEACH

BLD DATE		LGL DATE	
XF DATE		LAND DATE	05/30/2023 MLU
INC DATE		AG DATE	

VALUATION SUMMARY

VALUATION BY		STANDARD
Tax Group: 4	Tax Dist:	
BUILDING MARKET VALUE		517,360
TOTAL MARKET OB/XF VALUE		6,490
TOTAL LAND VALUE - MARKET		101,250
TOTAL MARKET VALUE		625,100
SOH/AGL Deduction		281,136
ASSESSED VALUE		343,964
TOTAL EXEMPTION VALUE	HX HB	50,000
BASE TAXABLE VALUE		293,964
TOTAL JUST VALUE		625,100
NCON VALUE		0
INCOME VALUE		
PREVIOUS YEAR MKT VALUE		524,712

PERMIT NUM	DESCRIPTION	AMT	ISSUED

SALES DATA

OFF RECORD Number	DATE	TYPE INST	Q U /	V I /	RSN CD	SALE PRICE
2701/863	2/28/2024	WD	U	I	11	100
GRANTOR: NEASE STEVE E & LAURA						
GRANTEE: NEASE LIVING TRUST						
1601/0250	1/16/2009	QC	U	V	19	100
GRANTOR: NEASE STEVE E & LAURA						
GRANTEE: NEASE STEVE E & LAU						

BUILDING NOTES

BUILDING DIMENSIONS

BAS=[YR=2022] W42S40E42N40$.

EXTRA FEATURES

LN	OB/XF CODE	DESCRIPTION	BLD	CAP	L	W	UNITS	UT	Adj R	ADJ UNIT PRICE	ORIG COND	YEAR ON	YEAR ACTUAL	Q	% COND	OB/XF MKT VALUE	NOTES

LAND DESCRIPTION

TOTAL OB/XF 0

LN	USE CODE	CLS	LAND USE DESCRIPTION	CAP	RD	LOC ZONE	FRONT	DEPTH	TOT LND UTS	UNIT TYPE	DT	DPTH FACT	% COND	TOT ADJ	UNIT PRICE	ADJ UNIT PRICE	LAND VALUE	OTHER ADJUSTMENTS AND NOTES	YEAR	DENSITY	DECL	FRZ	YR	CONSRV

REVIEW DATE 01/08/2023 BY DJ Total Acres: 1.35 Total Land Value: 101,250 Market: 0 Agricultural: 0 Common: 101,250 PRINTED 08/06/2024 BY SYS