IN OR 2670/784
ESMT OR 1004/480

ESHBAUGH DANIEL CHAPIN & JILL MARIE
95250 COOK RD
FERNANDINA BEACH, FL 32034

2024

45-2N-28-0000-0001-0010

NASSAU COUNTY PROPERTY

BUILDING CHARACTERISTICS

ELEMENT	CD	CONSTRUCTION
Exterior Wall	10	ABOVE AVG 60
Exterior Wall	16	WD FR STUC 40
Roof Structur	08	IRREGULAR 100
Roof Cover	03	COMP SHNGL 50
Roof Cover	12	MODULAR MT 50
Interior Wall	05	DRYWALL 100
Interior Floo	12	HARDWOOD 70
Interior Floo	14	CARPET 30
Air Condition	03	CENTRAL 100
Heating Type	04	AIR DUCTED 100
Bedrooms		4 100
Bathrooms		3 100
Frame	02	WOOD FRAME 100
Stories	2.	2. 100
Units		0 100
Occupancy	00	NONE 100
Quality	01	Quality Level 01
DOR CODE	0100	SINGLE FAMILY
MAP NUM		MKT AREA 04
NEIGHBORHOOD/LOC	4005.00	

AREA TYPE	TOTAL GROSS AREA	PCT OF BASE	TOT ADJ AREA	SUBAREA MARKET VALUE
BAS	2,329	100	2,329	288,083
BAS	280	100	280	34,635
FOP	210	30	63	7,793
FOP	42	30	13	1,608
FOP	793	30	238	29,439
FUS	1,420	100	1,420	175,645
TOTALS	5,074		4,343	537,203

MARKET ADJUSTMENTS

TYPE	MDL	EFF. AREA	TOT ADJ PTS	EFF. BASE RATE	REPL. COST NEW	AYB	EYB	ECON	FNCT		NORM	% COND
0500	01	4,343	87.9120	131.87	572,711	2003	2010	0	0	0	6.20	93.80

1 SFR CUST – 0% - 2024 Heated Area: 4029 HX Base Yr

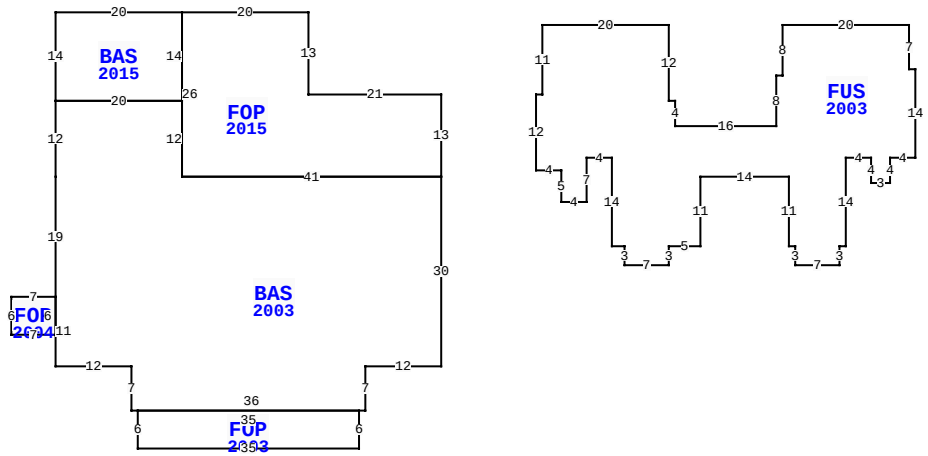

95250 COOK RD, FERNANDINA BEACH

BLD DATE		LGL DATE	
XF DATE		LAND DATE	05/30/2023 MLU
INC DATE		AG DATE	

VALUATION SUMMARY

VALUATION BY	STANDARD
Tax Group: 4	Tax Dist:
BUILDING MARKET VALUE	537,203
TOTAL MARKET OB/XF VALUE	150,688
TOTAL LAND VALUE - MARKET	877,500
TOTAL MARKET VALUE	1,565,391
SOH/AGL Deduction	0
ASSESSED VALUE	1,565,391
TOTAL EXEMPTION VALUE	0
BASE TAXABLE VALUE	1,565,391
TOTAL JUST VALUE	1,565,391
NCON VALUE	0
INCOME VALUE	
PREVIOUS YEAR MKT VALUE	1,167,052

PERMIT NUM	DESCRIPTION	AMT	ISSUED
B1530637	SCRNROOM	42,430	06/01/2015
B1428861	ADDITION	280,000	06/01/2014
B19816	SWIM POOL	40,300	04/01/2007
R023810	NEW CONSTR	22,000	02/01/2002
B0209190	NEW CONSTR	360,000	01/01/2002

SALES DATA

OFF RECORD Number	DATE	TYPE INST	Q / U	V / I	RSN CD	SALE PRICE
2670/784	9/28/2023	WD	Q	I	01	1,685,000
GRANTOR: FOY LIVING TRUST						
GRANTEE: ESHBAUGH DANIEL CHA						
2461/0352	5/03/2021	SW	U	I	11	100
GRANTOR: FOY THOMAS D JR & PAT						
GRANTEE: FOY LIVING TRUST						

BUILDING NOTES

BUILDING DIMENSIONS

FOP=[YR=2015] W21 N13 W20 BAS=[YR=2015] W20 S14 BAS=[YR=2003] S12 S19 FOP=[YR=2004] W7 S6 E7 N6 $ S11 E12 S7 E1 FOP=[YR=2003] S6 E35 N6 W35 $ E36 N7 E12 N30 W41 N12 W20$ E20 N14$ S26 E41 N13$ PTR= E15 FUS=[YR=2003] E1 N11E20 S12 E1 S4 E16 N8 E1 N8 E20S7 E1 S14 W4 S4 W3 N4 W4 S14 W1 S3 W7 N3 W1 N11 W14 S11 W5 S3 W7 N3 W2 N14 W4 S7 W4 N5 W4N12 $ W15 $.

EXTRA FEATURES

LN	OB/XF CODE	DESCRIPTION	BLD	CAP	L	W	UNITS	UT	Adj R	ADJ UNIT PRICE	ORIG COND	YEAR ON	YEAR ACTUAL	Q	% COND	OB/XF MKT VALUE	NOTES
1	0810	CONCRETE A	0	0	0	0	580.00	SF	6.50	6.50	100	2002	2002	3	82	3,091	
2	0300	BOAT DCK W	0	0	0	0	2,025.00	SF	40.00	40.00	100	2002	2002	3	30	24,300	
3	0310	AL GANG WY	0	0	0	0	16.00	LF	115.00	115.00	100	2016	2016	3	74	1,362	
4	0303	FLT DOCK W	0	0	12	20	240.00	SF	26.00	26.00	100	2016	2016	3	81	5,054	
5	0322	BOAT LFT L	0	0	0	0	1.00	UT	1,500.00	1,500.00	100	2002	2002	3	20	300	
6	0500	FP-PRE FAB	0	0	0	0	2.00	UT	3,500.00	3,500.00	100	2003	2003	3	87	6,090	
7	0812	CONCRETE C	0	0	0	0	2,548.00	SF	4.00	4.00	100	2003	2003	3	83	8,459	
8	0510	GARAGE WD-	0	0	38	24	912.00	SF	70.00	70.00	100	2003	2003	3	32	20,429	
9	0812	CONCRETE C	0	0	0	0	4,255.00	SF	4.00	4.00	100	2003	2003	3	83	14,127	
10	0861	POOL GUNIT	0	0	33	14	462.00	SF	85.00	85.00	100	2007	2007	3	48	18,850	

TOTAL OB/XF 102,062

LAND DESCRIPTION

LN	USE CODE	CLS	LAND USE DESCRIPTION	CAP	RD	LOC ZONE	FRONT	DEPTH	TOT LND UTS	UNIT TYPE	DT	DPTH FACT	% COND	TOT ADJ	UNIT PRICE	ADJ UNIT PRICE	LAND VALUE	OTHER ADJUSTMENTS AND NOTES	YEAR	DENSITY	DECL	FRZ	YR	CONSRV
1	000130	C	SFR WATER	0	0005	RSF-	1130.00	765.00	130.00	FF		1.00	1.00	0.90	7,500.00	6,750.00	877,500							

REVIEW DATE 01/27/2020 BY KW Total Acres: 0.00 Total Land Value: 877,500 Market: 0 Agricultural: 0 Common: 877,500 PRINTED 08/06/2024 BY SYS

IN OR 2670/784
ESMT OR 1004/480

ESHBAUGH DANIEL CHAPIN & JILL MARIE
95250 COOK RD
FERNANDINA BEACH, FL 32034

2024

45-2N-28-0000-0001-0010

NASSAU COUNTY PROPERTY

BUILDING CHARACTERISTICS

ELEMENT	CD	CONSTRUCTION

DOR CODE	0100	SINGLE FAMILY	
MAP NUM		MKT AREA	04
NEIGHBORHOOD/LOC	4005.00		

AREA TYPE	TOTAL GROSS AREA	PCT OF BASE	TOT ADJ AREA	SUBAREA MARKET VALUE
TOTALS				

MARKET ADJUSTMENTS

TYPE	MDL	EFF. AREA	TOT ADJ PTS	EFF. BASE RATE	REPL. COST NEW	AYB	EYB	ECON	FNCT		NORM	% COND

BLD DATE		LGL DATE	
XF DATE		LAND DATE	05/30/2023 MLU
INC DATE		AG DATE	

VALUATION SUMMARY

VALUATION BY	STANDARD
Tax Group: 4	Tax Dist:
BUILDING MARKET VALUE	537,203
TOTAL MARKET OB/XF VALUE	150,688
TOTAL LAND VALUE - MARKET	877,500
TOTAL MARKET VALUE	1,565,391
SOH/AGL Deduction	0
ASSESSED VALUE	1,565,391
TOTAL EXEMPTION VALUE	0
BASE TAXABLE VALUE	1,565,391
TOTAL JUST VALUE	1,565,391
NCON VALUE	0
INCOME VALUE	
PREVIOUS YEAR MKT VALUE	1,167,052

PERMIT NUM	DESCRIPTION	AMT	ISSUED

SALES DATA

OFF RECORD Number	DATE	TYPE INST	Q U /	V I /	RSN CD	SALE PRICE
2670/784	9/28/2023	WD	Q	I	01	1,685,000
GRANTOR: FOY LIVING TRUST						
GRANTEE: ESHBAUGH DANIEL CHA						
2461/0352	5/03/2021	SW	U	I	11	100
GRANTOR: FOY THOMAS D JR & PAT						
GRANTEE: FOY LIVING TRUST						

BUILDING NOTES

BUILDING DIMENSIONS

EXTRA FEATURES

LN	OB/XF CODE	DESCRIPTION	BLD	CAP	L	W	UNITS	UT	Adj R	ADJ UNIT PRICE	ORIG COND	YEAR ON	YEAR ACTUAL	Q	% COND	OB/XF MKT VALUE	NOTES
11	0462	ST/AL FNC	0	0	0	0	576.00	SF	10.00	10.00	100	2007	2007	3	48	2,765	
12	0845	KOOL DECK	0	0	0	0	1,122.00	SF	7.25	7.25	100	2007	2007	3	88	7,158	
13	0871	POOL HTR R	0	0	0	0	1.00	UT	2,000.00	2,000.00	100	2007	2007	3	31	620	
14	0825	BRICK	0	0	8	5	40.00	SF	12.50	12.50	100	2003	2003	3	95	475	
15	0855	CONC PAVER	0	0	18	6	108.00	SF	10.00	10.00	100	2015	2015	3	95	1,026	
16	0911	SCRN RM A	0	0	66	24	1,584.00	SF	17.50	17.50	100	2015	2015	3	70	19,404	
17	0470	VNYL GATE	0	0	0	0	1.00	UT	300.00	300.00	100	2015	2015	3	89	267	
18	0476	VF 6 SBPL	0	0	0	0	425.00	LF	32.00	32.00	100	2015	2015	3	89	12,104	
19	0317	DCK PLNG W	0	0	0	0	4.00	UT	1,000.00	1,000.00	100	2016	2016	3	74	2,960	
20	0350	CARPORT WD	0	0	16	12	192.00	SF	13.00	13.00	100	2016	2016	3	74	1,847	

TOTAL OB/XF 48,626

LAND DESCRIPTION

LN	USE CODE	CLS	LAND USE DESCRIPTION	CAP	RD	LOC ZONE	FRONT	DEPTH	TOT LND UTS	UNIT TYPE	DT	DPTH FACT	% COND	TOT ADJ	UNIT PRICE	ADJ UNIT PRICE	LAND VALUE	OTHER ADJUSTMENTS AND NOTES	YEAR	DENSITY	DECL	FRZ	YR	CONSRV

REVIEW DATE 01/27/2020 BY KW Total Acres: 0.00 Total Land Value: 877,500 Market: 0 Agricultural: 0 Common: 877,500 PRINTED 08/06/2024 BY SYS