LOT 58
IN OR 1293/1287
RAINBOW ACRES SUB UNR PLAT

SEUTER EDWARD J & MEGAN K
3149 WINCHESTER RD
DELAPLANE, VA 20144-1942

2024

44-2N-28-5210-0058-0000

NASSAU COUNTY PROPERTY

BUILDING CHARACTERISTICS

ELEMENT	CD	CONSTRUCTION
Exterior Wall	20	FACE BRICK 100
Roof Structur	03	GABLE/HIP 100
Roof Cover	03	COMP SHNGL 100
Interior Wall	05	DRYWALL 100
Interior Floo	11	CLAY TILE 50
Interior Floo	14	CARPET 50
Air Condition	03	CENTRAL 100
Heating Type	04	AIR DUCTED 100
Bedrooms		3 100
Bathrooms		2 100
Frame	02	WOOD FRAME 100
Stories	1.	1. 100
Units		0 100
Occupancy	00	NONE 100
Quality	03	Quality Level 03
DOR CODE	0100	SINGLE FAMILY
MAP NUM		MKT AREA 04
NEIGHBORHOOD/LOC	4006.00	

AREA TYPE	TOTAL GROSS AREA	PCT OF BASE	TOT ADJ AREA	SUBAREA MARKET VALUE
BAS	2,366	100	2,366	266,707
FGR	672	55	370	41,708
FOP	56	30	17	1,916
FOP	184	30	55	6,200
TOTALS	3,278		2,808	316,532

MARKET ADJUSTMENTS

TYPE	MDL	EFF. AREA	TOT ADJ PTS	EFF. BASE RATE	REPL. COST NEW	AYB	EYB	ECON	FNCT		NORM	% COND
0900	01	2,808	108.0000	135.00	379,080	2001	2001	0	0	0	16.50	83.50

1 SNGL FAM – 0% - 0 Heated Area: 2366 HX Base Yr

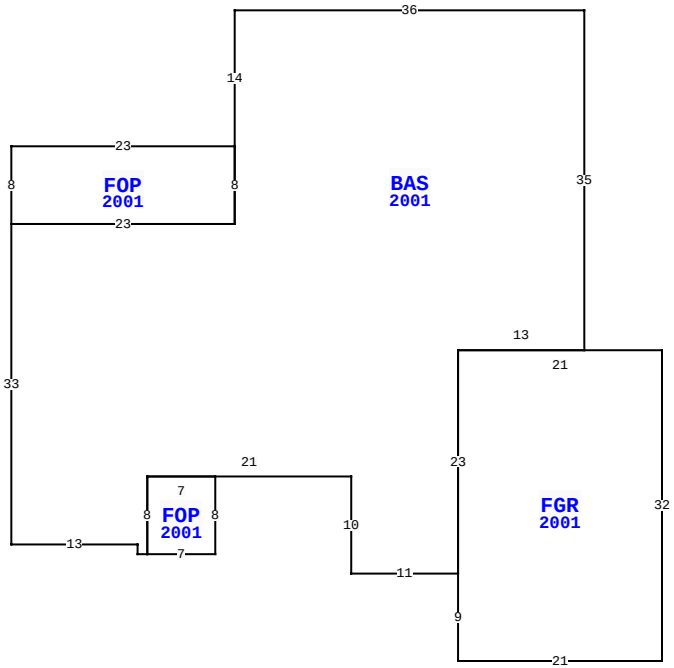

95280 ARBOR LN, FERNANDINA BEACH

BLD DATE		LGL DATE	
XF DATE		LAND DATE	05/30/2023 MLU
INC DATE		AG DATE	

VALUATION SUMMARY

VALUATION BY	STANDARD
Tax Group: 4	Tax Dist:
BUILDING MARKET VALUE	316,532
TOTAL MARKET OB/XF VALUE	13,752
TOTAL LAND VALUE - MARKET	179,000
TOTAL MARKET VALUE	509,284
SOH/AGL Deduction	127,502
ASSESSED VALUE	381,782
TOTAL EXEMPTION VALUE	0
BASE TAXABLE VALUE	381,782
TOTAL JUST VALUE	509,284
NCON VALUE	0
INCOME VALUE	
PREVIOUS YEAR MKT VALUE	511,015

PERMIT NUM	DESCRIPTION	AMT	ISSUED
E007169	CHNGE SRVC	5,200	08/01/2000
B0007421	NEW CONSTR	164,000	08/01/2000

SALES DATA

OFF RECORD Number	DATE	TYPE INST	Q / U	V / I	RSN CD	SALE PRICE
1293/1287	2/07/2005	WD	Q	I		350,000
GRANTOR: GAINES JAMES C & MARG						
GRANTEE: SEUTER EDWARD J & M						
0868/0848	2/18/1999	WD	Q	V		33,300
GRANTOR: MILLER ROBERT L & ALI						
GRANTEE: GAINES JAMES CLIFFO						

BUILDING NOTES

BUILDING DIMENSIONS

BAS=[YR=2001] W36 S14 FOP=[YR=2001] W23 S8 E23 N8 $ S8 W23 S33 E13 S1 E1 FOP=[YR=2001] E7 N8 W7 S8 $ N8 E21 S10 E11 FGR=[YR=2001] S9 E21 N32 W21 S23 $ N23 E13 N35 $.

EXTRA FEATURES

LN	OB/XF CODE	DESCRIPTION	BLD	CAP	L	W	UNITS	UT	Adj R	ADJ UNIT PRICE	ORIG COND	YEAR ON	YEAR ACTUAL	Q	% COND	OB/XF MKT VALUE	NOTES
1	0812	CONCRETE C	0	0	0	0	3,867.00	SF	4.00	4.00	100	2001	2001	3	80	12,374	
2	1127	BRICK 8"	0	0	0	0	52.00	SF	11.00	11.00	100	2001	2001	3	94	538	
3	0940	SHEDS/PORT	0	0	10	14	140.00	SF	30.00	30.00	100	2002	2002	3	20	840	

LAND DESCRIPTION

TOTAL OB/XF 13,752

LN	USE CODE	CLS	LAND USE DESCRIPTION	CAP	RD	LOC ZONE	FRONT	DEPTH	TOT LND UTS	UNIT TYPE	DT	DPTH FACT	% COND	TOT ADJ	UNIT PRICE	ADJ UNIT PRICE	LAND VALUE	OTHER ADJUSTMENTS AND NOTES	YEAR	DENSITY	DECL	FRZ	YR	CONSRV
1	000115	C	SFR ACRES	0		RS-E	0.00	0.00	2.38	AC		1.00	1.00	1.00	75,000.00	75,000.00	178,500							
2	009530	C	POND	0		RS-E			0.20	AC		1.00	1.00	1.00	2,500.00	2,500.00	500							

REVIEW DATE 03/06/2024 BY NWA Total Acres: 2.58 Total Land Value: 179,000 Market: 0 Agricultural: 0 Common: 179,000 PRINTED 08/06/2024 BY SYS