LOT 37
IN OR 2718/801
RAINBOW ACRES SUB UNR PLAT

BROWN KYLE
95476 RAINBOW ACRES RD
FERNANDINA BEACH, FL 32034

2024

44-2N-28-5210-0037-0000

NASSAU COUNTY PROPERTY

BUILDING CHARACTERISTICS

ELEMENT	CD	CONSTRUCTION
Exterior Wall	05	AVERAGE 100
Roof Structur	03	GABLE/HIP 100
Roof Cover	12	MODULAR MT 100
Interior Wall	05	DRYWALL 100
Interior Floo	14	CARPET 70
Interior Floo	11	CLAY TILE 30
Air Condition	03	CENTRAL 100
Heating Type	04	AIR DUCTED 100
Bedrooms		2 100
Bathrooms		1 100
Frame	02	WOOD FRAME 100
Stories	1.	1. 100
Units		0 100
BUD8 Adjustme	04	DIST 01 100
Occupancy	00	NONE 100
Quality	05	Quality Level 05

DOR CODE	0100	SINGLE FAMILY	
MAP NUM		MKT AREA	04
NEIGHBORHOOD/LOC	4006.00		

AREA TYPE	TOTAL GROSS AREA	PCT OF BASE	TOT ADJ AREA	SUBAREA MARKET VALUE
BAS	1,184	100	1,184	113,320
BAS	192	100	192	18,376
FEP	192	80	154	14,739
TOTALS	1,568		1,530	146,436

MARKET ADJUSTMENTS

TYPE	MDL	EFF. AREA	TOT ADJ PTS	EFF. BASE RATE	REPL. COST NEW	AYB	EYB	ECON	FNCT		NORM	% COND
0100	01	1,530	119.9418	113.94	174,328	1979	1988	0	0	0	16.00	84.00

1 SINGLE FAM – 0% - 2023 Heated Area: 1376 HX Base Yr

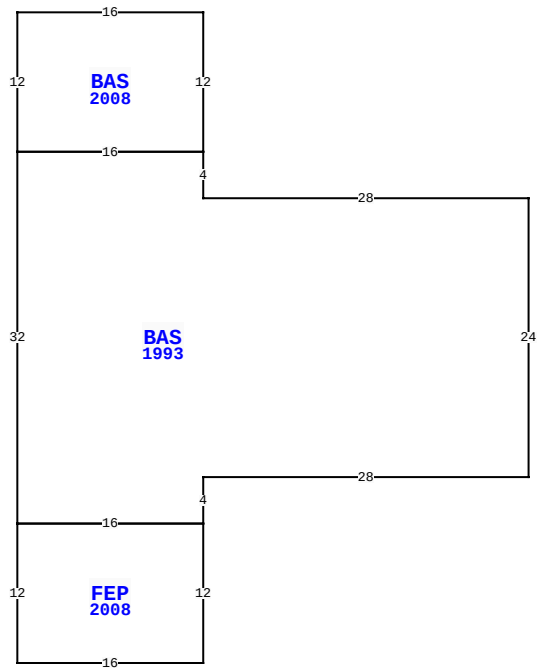

95476 RAINBOW ACRES RD, FERNANDINA BEACH

BLD DATE	05/05/2009	RK	LGL DATE	
XF DATE			LAND DATE	05/30/2023 MLU
INC DATE			AG DATE	

VALUATION SUMMARY

VALUATION BY	STANDARD
Tax Group: 4	Tax Dist:
BUILDING MARKET VALUE	146,436
TOTAL MARKET OB/XF VALUE	16,728
TOTAL LAND VALUE - MARKET	148,688
TOTAL MARKET VALUE	311,852
SOH/AGL Deduction	0
ASSESSED VALUE	311,852
TOTAL EXEMPTION VALUE	0
BASE TAXABLE VALUE	311,852
TOTAL JUST VALUE	311,852
NCON VALUE	0
INCOME VALUE	
PREVIOUS YEAR MKT VALUE	305,516

PERMIT NUM	DESCRIPTION	AMT	ISSUED
E118436	CHNGE SRVC	1,900	09/07/2021
M1216885	H/AC	0	02/21/2012
B018536	GARAGE	40,000	07/01/2001

SALES DATA

OFF RECORD Number	DATE	TYPE INST	Q U	V I	RSN CD	SALE PRICE
2718/801	6/07/2024	WD	Q	I	01	320,000
GRANTOR: CONRAD BRENT C & TAMM						
GRANTEE: BROWN KYLE						
2296/1806	7/25/2019	QC	U	I	11	100
GRANTOR: CONRAD BRENT CHANDLER						
GRANTEE: CONRAD BRENT C & TA						

BUILDING NOTES

BUILDING DIMENSIONS

BAS=[YR=1993] W28 N4 BAS=[YR=2008] N12 W16 S12 E16 $ W16
S32 FEP=[YR=2008] S12 E16 N12 W16 $ E16 N4 E28 N24 $.

EXTRA FEATURES

LN	OB/XF CODE	DESCRIPTION	BLD	CAP	L	W	UNITS	UT	Adj R	ADJ UNIT PRICE	ORIG COND	YEAR ON	YEAR ACTUAL	Q	% COND	OB/XF MKT VALUE	NOTES
1	2701	QUONSET GD	0	0	0	0	1,600.00	SF	15.00	15.00	100	2001	2001	3	48	11,520	
2	0810	CONCRETE A	0	0	0	0	360.00	SF	6.50	6.50	100	2001	2001	3	80	1,872	
3	0810	CONCRETE A	0	0	0	0	546.00	SF	6.50	6.50	100	2013	2013	3	94	3,336	

LAND DESCRIPTION

TOTAL OB/XF 16,728

LN	USE CODE	CLS	LAND USE DESCRIPTION	CAP	RD	LOC ZONE	FRONT	DEPTH	TOT LND UTS	UNIT TYPE	DT	DPTH FACT	% COND	TOT ADJ	UNIT PRICE	ADJ UNIT PRICE	LAND VALUE	OTHER ADJUSTMENTS AND NOTES	YEAR	DENSITY	DECL	FRZ	YR	CONSRV
1	000115	C	SFR ACRES	0	0006	OR	0.00	0.00	1.66	AC		1.00	1.00	1.00	75,000.00	75,000.00	124,500							
2	000115	C	SFR ACRES	0		OR	0.00	0.00	1.29	AC		1.00	1.00	0.25	75,000.00	18,750.00	24,188							

REVIEW DATE 04/01/2019 BY KW Total Acres: 2.95 Total Land Value: 148,688 Market: 0 Agricultural: 0 Common: 148,688 PRINTED 08/06/2024 BY SYS