BLK B (K/A PARCEL B} LOT 16
IN OR 1177/1869
WILDERS SUB OF NASSAU RIVER

LARKIN JON S II & SUZANNE
PO BOX 1747
DADE CITY, FL 33526

2024

44-2N-28-5200-0016-0000

NASSAU COUNTY PROPERTY

BUILDING CHARACTERISTICS

ELEMENT	CD	CONSTRUCTION
Exterior Wall	11	BD/BTN AVG 100
Roof Structur	08	IRREGULAR 100
Roof Cover	12	MODULAR MT 100
Interior Wall	06	CUST PANEL 100
Interior Floo	12	HARDWOOD 100
Air Condition	03	CENTRAL 100
Heating Type	04	AIR DUCTED 100
Bedrooms		3 100
Bathrooms		3.5 100
Frame	02	WOOD FRAME 100
Stories	1.	1. 100
Units		0 100
Occupancy	00	NONE 100
Quality	05	Quality Level 05

DOR CODE 0100 SINGLE FAMILY
MAP NUM | MKT AREA 04
NEIGHBORHOOD/LOC 4009.00

AREA TYPE	TOTAL GROSS AREA	PCT OF BASE	TOT ADJ AREA	SUBAREA MARKET VALUE
BAS	656	100	656	98,529
BAS	1,883	100	1,883	282,821
UOP	60	20	12	1,803
UOP	60	20	12	1,803
USP	21	30	6	901
USP	50	30	15	2,253
USP	90	30	27	4,055
USP	1,075	30	322	48,363
TOTALS	3,895		2,933	440,529

MARKET ADJUSTMENTS

TYPE	MDL	EFF. AREA	TOT ADJ PTS	EFF. BASE RATE	REPL. COST NEW	AYB	EYB	ECON	FNCT		NORM	% COND
0900	01	2,933	131.3180	164.15	481,452	2006	2006	0	0	0	8.50	91.50

1 SNGL FAM – 0% - 0 Heated Area: 2539 HX Base Yr

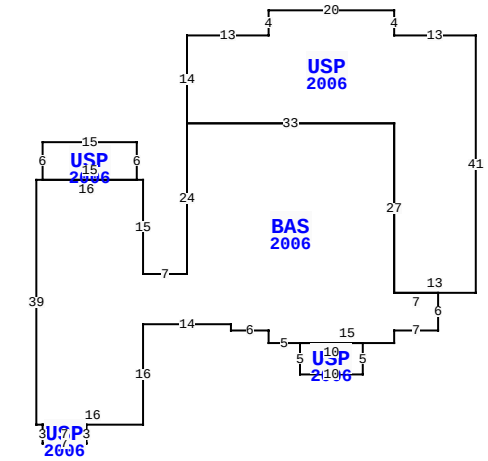

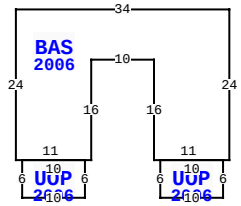

95484 WILDER BLVD, FERNANDINA BEACH

BLD DATE		LGL DATE	
XF DATE		LAND DATE	03/13/2024 MLU
INC DATE		AG DATE	

VALUATION SUMMARY

VALUATION BY	STANDARD
Tax Group: 4	Tax Dist:
BUILDING MARKET VALUE	475,570
TOTAL MARKET OB/XF VALUE	58,542
TOTAL LAND VALUE - MARKET	750,000
TOTAL MARKET VALUE	1,284,112
SOH/AGL Deduction	382,431
ASSESSED VALUE	901,681
TOTAL EXEMPTION VALUE	0
BASE TAXABLE VALUE	901,681
TOTAL JUST VALUE	1,284,112
NCON VALUE	0
INCOME VALUE	
PREVIOUS YEAR MKT VALUE	917,174

PERMIT NUM	DESCRIPTION	AMT	ISSUED
E19829	ELEC OTHER	1,800	08/01/2007
R10451	REPAIR/RRF	3,600	06/01/2007
R08554	REPAIR/RRF	11,600	11/01/2005
R08555	REPAIR/RRF	3,200	11/01/2005
M0509924	H/AC	0	06/01/2005
P0509594	OTHER	0	06/01/2005

SALES DATA

OFF RECORD Number	DATE	TYPE INST	Q / U	V / I	RSN CD	SALE PRICE
1177/1869	10/03/2003	WD	Q	V		400,000
GRANTOR: MEADOWS INCORPORATED						
GRANTEE: LARKIN JON S II & S						
0839/1365	7/01/1998	WD	U	V	08	140,000
GRANTOR: GRIFFIN JOSEPH W JR &						
GRANTEE: ROSS ALLAN M & LOLE						

BUILDING NOTES

BUILDING DIMENSIONS

USP=[YR=2006] W13 N4 W20 S4 W13 S14 BAS=[YR=2006] S24 W7 N15 W1 USP=[YR=2006] N6W15 S6 E15 $ W16 S39 E1 USP=[YR=2006] S3 E7 N3 W7 $ E16 N16 E14 S1 E6 S2 E5 USP=[YR=2006] S5 E10 N5 W10 $ E15 N2 E7 N6 W7 N27 W33$ E33 S27 E13 N41 $ PTR= E40 BAS=[YR=2006] E34 S24 W1 UOP=[YR=2006] S6 W10 N6 E10 $ W11 N16 W10 S16 W1 UOP=[YR=2006] S6 W10 N6 E10$ W11 N24 $ W40 $.

EXTRA FEATURES

L N	OB/XF CODE	DESCRIPTION	BLD	CAP	L	W	UNITS	UT	Adj R	ADJ UNIT PRICE	ORIG COND	YEAR ON	YEAR ACTUAL	Q	% COND	OB/XF MKT VALUE	NOTES
1	0300	BOAT DCK W	0	0	0	0	652.00	SF	40.00	40.00	100	2005	2005	3	40	10,432	
2	0323	BOAT LFT H	0	0	0	0	1.00	UT	2,500.00	2,500.00	100	2005	2005	3	24	600	
3	0310	AL GANG WY	0	0	0	0	20.00	LF	115.00	115.00	100	2005	2005	3	24	552	
4	0303	FLT DOCK W	0	0	14	10	140.00	SF	26.00	26.00	100	2005	2005	3	40	1,456	
5	0504	FP-ELECTRI	0	0	0	0	2.00	UT	2,000.00	2,000.00	100	2006	2006	3	90	3,600	
6	0858	SCULP CONC	0	0	0	0	1,910.00	SF	13.00	13.00	100	2006	2006	3	96	23,837	
7	0812	CONCRETE C	0	0	0	0	3,452.00	SF	4.00	4.00	100	2006	2006	3	87	12,013	
8	1243	WD DECK F	0	0	0	0	203.00	SF	8.00	8.00	100	2006	2006	3	27	438	
9	0310	AL GANG WY	0	0	0	0	40.00	LF	115.00	115.00	100	2009	2009	3	40	1,840	
10	0350	CARPORT WD	0	0	0	0	495.00	SF	13.00	13.00	100	2009	2009	3	40	2,574	

TOTAL OB/XF 57,342

LAND DESCRIPTION

L N	USE CODE	CLS	LAND USE DESCRIPTION	CAP	R D	LOC ZONE	FRONT	DEPTH	TOT LND UTS	UNIT TYPE	D T	DPTH FACT	% COND	TOT ADJ	UNIT PRICE	ADJ UNIT PRICE	LAND VALUE	OTHER ADJUSTMENTS AND NOTES	YEAR	DENSITY	DECL	FRZ	YR	CONSRV
1	000132	C	SFR RIVER	0		RSF-1	100.00	350.00	100.00	FF		1.00	1.00	1.00	7,500.00	7,500.00	750,000							

REVIEW DATE 05/03/2019 BY KW Total Acres: 0.00 Total Land Value: 750,000 Market: 0 Agricultural: 0 Common: 750,000 PRINTED 08/06/2024 BY SYS

BLK B (K/A PARCEL B} LOT 16
IN OR 1177/1869
WILDERS SUB OF NASSAU RIVER

LARKIN JON S II & SUZANNE
PO BOX 1747
DADE CITY, FL 33526

2024

44-2N-28-5200-0016-0000

NASSAU COUNTY PROPERTY

BUILDING CHARACTERISTICS

ELEMENT	CD	CONSTRUCTION
Exterior Wall	11	BD/BTN AVG 100
Roof Structur	03	GABLE/HIP 100
Roof Cover	12	MODULAR MT 100
Interior Wall	05	DRYWALL 100
Interior Floo	13	LVT/LAMNT 100
Air Condition	03	CENTRAL 100
Heating Type	04	AIR DUCTED 100
Bedrooms		1 100
Bathrooms		1 100
Frame	02	WOOD FRAME 100
Stories	2.	2. 100
Units		0 100
Occupancy	00	NONE 100
Quality	01	Quality Level 01

DOR CODE	0100	SINGLE FAMILY	
MAP NUM		MKT AREA	04
NEIGHBORHOOD/LOC	4009.00		

AREA TYPE	TOTAL GROSS AREA	PCT OF BASE	TOT ADJ AREA	SUBAREA MARKET VALUE
BAS	650	100	650	21,528
FGR	680	55	374	12,387
FOP	101	30	30	994
PTO	71	5	4	133
TOTALS	1,502		1,058	35,041

MARKET ADJUSTMENTS

TYPE	MDL	EFF. AREA	TOT ADJ PTS	EFF. BASE RATE	REPL. COST NEW	AYB	EYB	ECON	FNCT	AP	NORM	% COND
0150	01	1,058	106.8480	53.42	56,518	2007	2007	0	0	30	8.00	62.00

2 ACCESORY U – 0% - 0 Heated Area: 650 HX Base Yr

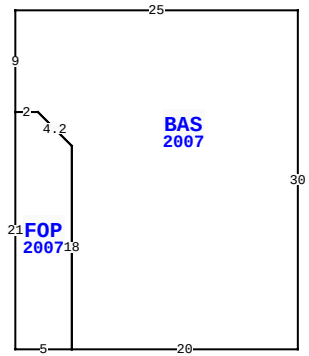

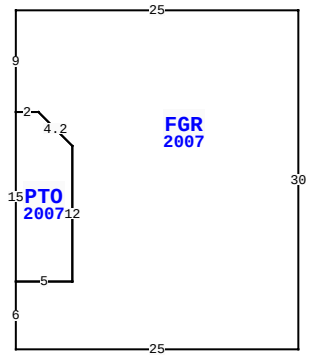

95484 WILDER BLVD, FERNANDINA BEACH

BLD DATE		LGL DATE	
XF DATE		LAND DATE	03/13/2024 MLU
INC DATE		AG DATE	

NASSAU COUNTY PROPERTY — VALUATION SUMMARY

VALUATION BY	STANDARD
Tax Group: 4	Tax Dist:
BUILDING MARKET VALUE	475,570
TOTAL MARKET OB/XF VALUE	58,542
TOTAL LAND VALUE - MARKET	750,000
TOTAL MARKET VALUE	1,284,112
SOH/AGL Deduction	382,431
ASSESSED VALUE	901,681
TOTAL EXEMPTION VALUE	0
BASE TAXABLE VALUE	901,681
TOTAL JUST VALUE	1,284,112
NCON VALUE	0
INCOME VALUE	
PREVIOUS YEAR MKT VALUE	917,174

PERMIT NUM	DESCRIPTION	AMT	ISSUED
P0509482	OTHER	0	05/01/2005
E14213	ELEC OTHER	2,000	02/01/2005
C0414248	CO ISSUED	244,400	12/01/2004
C0414249	CO ISSUED	85,000	12/01/2004
B0414248	NEW CONSTR	244,400	12/01/2004
B0414249	NEW CONSTR	85,000	12/01/2004

SALES DATA

OFF RECORD Number	DATE	TYPE INST	Q U /	V I /	RSN CD	SALE PRICE
1177/1869	10/03/2003	WD	Q	V		400,000
GRANTOR: MEADOWS INCORPORATED						
GRANTEE: LARKIN JON S II & S						
0839/1365	7/01/1998	WD	U	V	08	140,000
GRANTOR: GRIFFIN JOSEPH W JR &						
GRANTEE: ROSS ALLAN M & LOLE						

BUILDING NOTES

BUILDING DIMENSIONS

BAS=[YR=2007] W25 S9 FOP=[YR=2007] S21 E5 N18 U3 L3 W2 $ E2 D3 R3 S18 E20 N30 $ PTR= E30 FGR=[YR=2007] E25 S30 W25 N6 PTO=[YR=2007] N15 E2 D3 R3 S12 W5 $ E5 N12 U3 L3 W2 N9 $ W30 $.

EXTRA FEATURES

LN	OB/XF CODE	DESCRIPTION	BLD	CAP	L	W	UNITS	UT	Adj R	ADJ UNIT PRICE	ORIG COND	YEAR ON	YEAR ACTUAL	Q	% COND	OB/XF MKT VALUE	NOTES
11	0322	BOAT LFT L	0	0	0	0	2.00	UT	1,500.00	1,500.00	100	2009	2009	3	40	1,200	

LAND DESCRIPTION

TOTAL OB/XF 1,200

LN	USE CODE	CLS	LAND USE DESCRIPTION	CAP	RD	LOC ZONE	FRONT	DEPTH	TOT LND UTS	UNIT TYPE	DT	DPTH FACT	% COND	TOT ADJ	UNIT PRICE	ADJ UNIT PRICE	LAND VALUE	OTHER ADJUSTMENTS AND NOTES	YEAR	DENSITY	DECL	FRZ	YR	CONSRV

REVIEW DATE 05/03/2019 BY KW Total Acres: 0.00 Total Land Value: 750,000 Market: 0 Agricultural: 0 Common: 750,000 PRINTED 08/06/2024 BY SYS