LOT 16
IN OR 1347/1313
MURRAY'S TRIANGLE PB 6/31

WILSON EDWARD E & TERESA W
96543 O'NEIL SCOTT ROAD
FERNANDINA BEACH, FL 32034

2024

44-2N-28-514M-0016-0000

BUILDING CHARACTERISTICS

ELEMENT	CD	CONSTRUCTION
Exterior Wall	19	COMMON BRK 80
Exterior Wall	15	CONC BLOCK 20
Roof Structur	03	GABLE/HIP 100
Roof Cover	03	COMP SHNGL 100
Interior Wall	04	PLYWOOD 70
Interior Wall	05	DRYWALL 30
Interior Floo	13	LVT/LAMNT 100
Air Condition	03	CENTRAL 100
Heating Type	04	AIR DUCTED 100
Bedrooms		3 100
Bathrooms		1 100
Frame	02	WOOD FRAME 100
Stories	1.	1. 100
Units		0 100
Occupancy	00	NONE 100
Quality	03	Quality Level 03
DOR CODE	0100	SINGLE FAMILY
MAP NUM		MKT AREA 04
NEIGHBORHOOD/LOC	4064.00	

AREA TYPE	TOTAL GROSS AREA	PCT OF BASE	TOT ADJ AREA	SUBAREA MARKET VALUE
BAS	1,549	100	1,549	112,968
FOP	80	30	24	1,750
UCP	228	20	46	3,355
UGR	572	45	257	18,743
UOP	684	20	137	9,991
USP	264	30	79	5,762
UST	96	45	43	3,136
TOTALS	3,473		2,135	155,706

MARKET ADJUSTMENTS

TYPE	MDL	EFF. AREA	TOT ADJ PTS	EFF. BASE RATE	REPL. COST NEW	AYB	EYB	ECON	FNCT		NORM	% COND
0100	01	2,135	112.8960	107.25	228,979	1960	1975	0	0	0	32.00	68.00

1 SINGLE FAM – 0% - 0 Heated Area: 1549 HX Base Yr

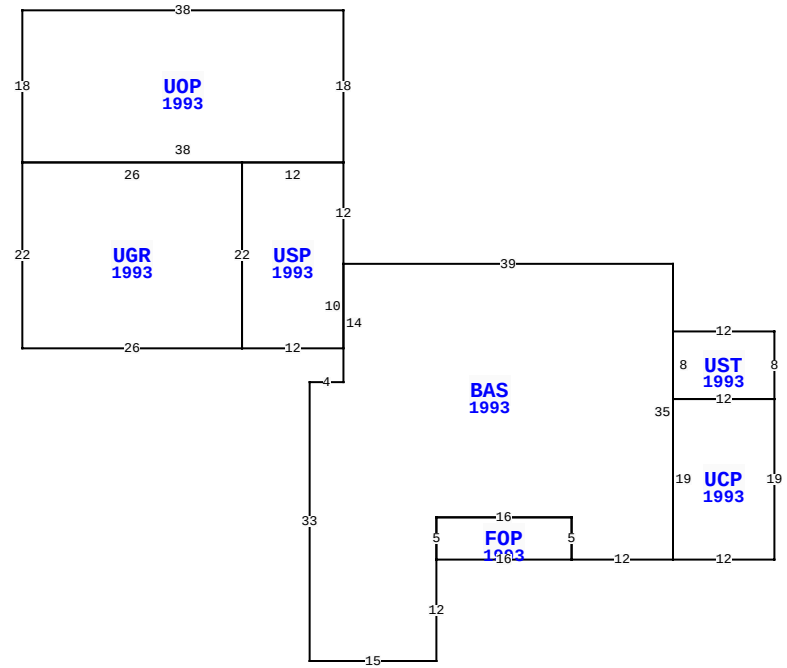

BLD DATE		LGL DATE	
XF DATE		LAND DATE	03/13/2024 MLU
INC DATE		AG DATE	

95140 NASSAU RIVER RD, FERNANDINA BEACH

NASSAU COUNTY PROPERTY

PAGE 1 of 2 4

VALUATION SUMMARY

VALUATION BY	STANDARD
Tax Group: 4	Tax Dist:
BUILDING MARKET VALUE	164,588
TOTAL MARKET OB/XF VALUE	4,514
TOTAL LAND VALUE - MARKET	140,000
TOTAL MARKET VALUE	309,102
SOH/AGL Deduction	57,911
ASSESSED VALUE	251,191
TOTAL EXEMPTION VALUE	0
BASE TAXABLE VALUE	251,191
TOTAL JUST VALUE	309,102
NCON VALUE	0
INCOME VALUE	
PREVIOUS YEAR MKT VALUE	245,780

PERMIT NUM	DESCRIPTION	AMT	ISSUED

SALES DATA

OFF RECORD Number	DATE	TYPE INST	Q / U	V / I	RSN CD	SALE PRICE
1347/1313	9/06/2005	WD	Q	I		255,000
GRANTOR: ROHRER CHARLES G & SA						
GRANTEE: WILSON EDWARD E & T						
0893/1283	8/02/1999	WD	Q	I		150,000
GRANTOR: MURRAY JASPER CLAUDE						
GRANTEE: ROHRER CHARLES G &						

BUILDING NOTES

BUILDING DIMENSIONS

BAS=[YR=1993] W39 USP=[YR=1993] N12 UOP=[YR=1993] N18 W38 S18 E38$ W12 UGR=[YR=1993] W26 S22 E26 N22$ S22 E12 N10$ S14 W4 S33 E15 N12 FOP=[YR=1993] E16 N5 W16 S5$ N5 E16 S5 E12 UCP=[YR=1993] E12 N19 UST=[YR=1993] N8 W12 S8 E12$ W12 S19 $ N35$.

EXTRA FEATURES

LN	OB/XF CODE	DESCRIPTION	BLD	CAP	L	W	UNITS	UT	Adj R	ADJ UNIT PRICE	ORIG COND	YEAR ON	YEAR ACTUAL	Q	% COND	OB/XF MKT VALUE	NOTES
1	0940	SHEDS/PORT	0	0	10	18	180.00	SF	30.00	30.00	100	1980	1980	3	20	1,080	
2	0500	FP-PRE FAB	0	0	0	0	1.00	UT	3,500.00	3,500.00	100	1983	1983	3	54	1,890	
3	0811	CONCRETE B	0	0	0	0	1,018.00	SF	5.20	5.20	100	1970	1970	3	21	1,112	
4	0680	POLE SHED	0	0	18	12	216.00	SF	10.00	10.00	100	1985	1985	3	20	432	

LAND DESCRIPTION

TOTAL OB/XF 4,514

LN	USE CODE	CLS	LAND USE DESCRIPTION	CAP	RD	LOC ZONE	FRONT	DEPTH	TOT LND UTS	UNIT TYPE	DT	DPTH FACT	% COND	TOT ADJ	UNIT PRICE	ADJ UNIT PRICE	LAND VALUE	OTHER ADJUSTMENTS AND NOTES	YEAR	DENSITY	DECL	FRZ	YR	CONSRV
1	000100	C	SFR	0		RSF-1	0.00	0.00	1.00	LT		1.00	1.00	2.00	70,000.00	140,000.00	140,000							

REVIEW DATE 04/01/2019 BY KWA Total Acres: 0.00 Total Land Value: 140,000 Market: 0 Agricultural: 0 Common: 140,000 PRINTED 08/06/2024 BY SYS

LOT 16
IN OR 1347/1313
MURRAY'S TRIANGLE PB 6/31

WILSON EDWARD E & TERESA W
96543 O'NEIL SCOTT ROAD
FERNANDINA BEACH, FL 32034

2024

44-2N-28-514M-0016-0000

NASSAU COUNTY PROPERTY

BUILDING CHARACTERISTICS

ELEMENT	CD	CONSTRUCTION
Exterior Wall	05	AVERAGE 100
Roof Structur	03	GABLE/HIP 100
Roof Cover	03	COMP SHNGL 100
Interior Wall	02	WALL BD/WD 100
Interior Floo	03	CONC FINSH 100
Air Condition	01	NONE 100
Heating Type	01	NONE 100
Bedrooms		0 100
Bathrooms		0 100
Frame	02	WOOD FRAME 100
Stories	1.	1. 100
Units		0 100
Occupancy	00	NONE 100
Quality	03	Quality Level 03

DOR CODE	0100	SINGLE FAMILY	
MAP NUM		MKT AREA	04
NEIGHBORHOOD/LOC	4064.00		

AREA TYPE	TOTAL GROSS AREA	PCT OF BASE	TOT ADJ AREA	SUBAREA MARKET VALUE
BAS	600	100	600	7,506
UCP	552	20	110	1,376
TOTALS	1,152		710	8,882

MARKET ADJUSTMENTS

TYPE	MDL	EFF. AREA	TOT ADJ PTS	EFF. BASE RATE	REPL. COST NEW	AYB	EYB	ECON	FNCT		NORM	% COND
6500	01	710	71.5000	25.02	17,764	1982	1982	0	0	0	50.00	50.00

2 GARAGE RES – 0% - 0 Heated Area: 600 HX Base Yr

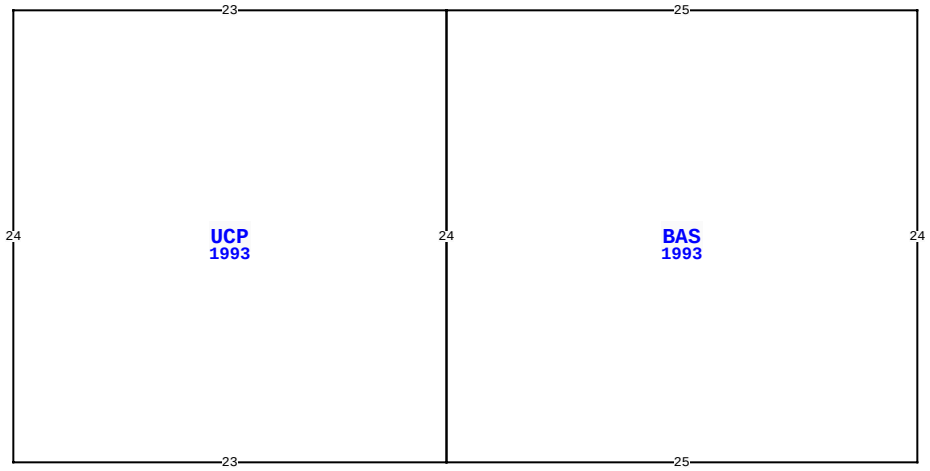

95140 NASSAU RIVER RD, FERNANDINA BEACH

BLD DATE		LGL DATE	
XF DATE		LAND DATE	03/13/2024 MLU
INC DATE		AG DATE	

VALUATION SUMMARY

VALUATION BY	STANDARD
Tax Group: 4	Tax Dist:
BUILDING MARKET VALUE	164,588
TOTAL MARKET OB/XF VALUE	4,514
TOTAL LAND VALUE - MARKET	140,000
TOTAL MARKET VALUE	309,102
SOH/AGL Deduction	57,911
ASSESSED VALUE	251,191
TOTAL EXEMPTION VALUE	0
BASE TAXABLE VALUE	251,191
TOTAL JUST VALUE	309,102
NCON VALUE	0
INCOME VALUE	
PREVIOUS YEAR MKT VALUE	245,780

PERMIT NUM	DESCRIPTION	AMT	ISSUED

SALES DATA

OFF RECORD Number	DATE	TYPE INST	Q U /	V I /	RSN CD	SALE PRICE
1347/1313	9/06/2005	WD	Q	I		255,000
GRANTOR: ROHRER CHARLES G & SA						
GRANTEE: WILSON EDWARD E & T						
0893/1283	8/02/1999	WD	Q	I		150,000
GRANTOR: MURRAY JASPER CLAUDE						
GRANTEE: ROHRER CHARLES G &						

BUILDING NOTES

BUILDING DIMENSIONS

BAS=[YR=1993] W25 UCP=[YR=1993] W23 S24 E23 N24 $ S24 E25 N24 $.

EXTRA FEATURES

LN	OB/XF CODE	DESCRIPTION	BLD	CAP	L	W	UNITS	UT	Adj R	ADJ UNIT PRICE	ORIG COND	YEAR ON	YEAR ACTUAL	Q	% COND	OB/XF MKT VALUE	NOTES

LAND DESCRIPTION

TOTAL OB/XF 0

LN	USE CODE	CLS	LAND USE DESCRIPTION	CAP	RD	LOC ZONE	FRONT	DEPTH	TOT LND UTS	UNIT TYPE	DT	DPTH FACT	% COND	TOT ADJ	UNIT PRICE	ADJ UNIT PRICE	LAND VALUE	OTHER ADJUSTMENTS AND NOTES	YEAR	DENSITY	DECL	FRZ	YR	CONSRV

REVIEW DATE 04/01/2019 BY KWA Total Acres: 0.00 Total Land Value: 140,000 Market: 0 Agricultural: 0 Common: 140,000 PRINTED 08/06/2024 BY SYS