BLOCK 2 LOT 1 &
S'LY 60 FT OF LOT 2 BLOCK 2
IN OR 1129/1835

WALLACE ANGELA S
95095 SHURWALL LANE
FERNANDINA BEACH, FL 32034

**2024**

**44-2N-28-5140-0002-0010**

## NASSAU COUNTY PROPERTY



## BUILDING CHARACTERISTICS

| ELEMENT | CD | CONSTRUCTION |
|---|---|---|
| Exterior Wall | 12 | CEDAR 70 |
| Exterior Wall | 16 | WD FR STUC 30 |
| Roof Structur | 08 | IRREGULAR 100 |
| Roof Cover | 03 | COMP SHNGL 100 |
| Interior Wall | 05 | DRYWALL 100 |
| Interior Floo | 12 | HARDWOOD 80 |
| Interior Floo | 11 | CLAY TILE 20 |
| Air Condition | 03 | CENTRAL 100 |
| Heating Type | 04 | AIR DUCTED 100 |
| Bedrooms | | 3 100 |
| Bathrooms | | 3 100 |
| Frame | 02 | WOOD FRAME 100 |
| Stories | 1.5 | 1.5 100 |
| Units | | 0 100 |
| BUD8 Adjustme | 04 | DIST 01 100 |
| Occupancy | 00 | NONE 100 |
| Quality | 04 | Quality Level 04 |
| DOR CODE | 0100 | SINGLE FAMILY |
| MAP NUM | | MKT AREA 04 |
| NEIGHBORHOOD/LOC | 4009.00 | |

| AREA TYPE | TOTAL GROSS AREA | PCT OF BASE | TOT ADJ AREA | SUBAREA MARKET VALUE |
|---|---|---|---|---|
| BAS | 2,185 | 100 | 2,185 | 274,922 |
| FGR | 760 | 55 | 418 | 52,594 |
| FOP | 56 | 30 | 17 | 2,139 |
| FOP | 116 | 30 | 35 | 4,404 |
| FOP | 120 | 30 | 36 | 4,530 |
| FSP | 604 | 40 | 242 | 30,449 |
| FUS | 880 | 100 | 880 | 110,723 |
| STR | 65 | 10 | 6 | 755 |
| TOTALS | 4,786 | | 3,819 | 480,515 |

## MARKET ADJUSTMENTS

| TYPE | MDL | EFF. AREA | TOT ADJ PTS | EFF. BASE RATE | REPL. COST NEW | AYB | EYB | ECON | FNCT | | NORM | % COND |
|---|---|---|---|---|---|---|---|---|---|---|---|---|
| 0900 | 01 | 3,819 | 111.2265 | 139.03 | 530,956 | 2004 | 2004 | 0 | 0 | 0 | 9.50 | 90.50 |

1 SNGL FAM – 100% - 2005 Heated Area: 3065 HX Base Yr 2005

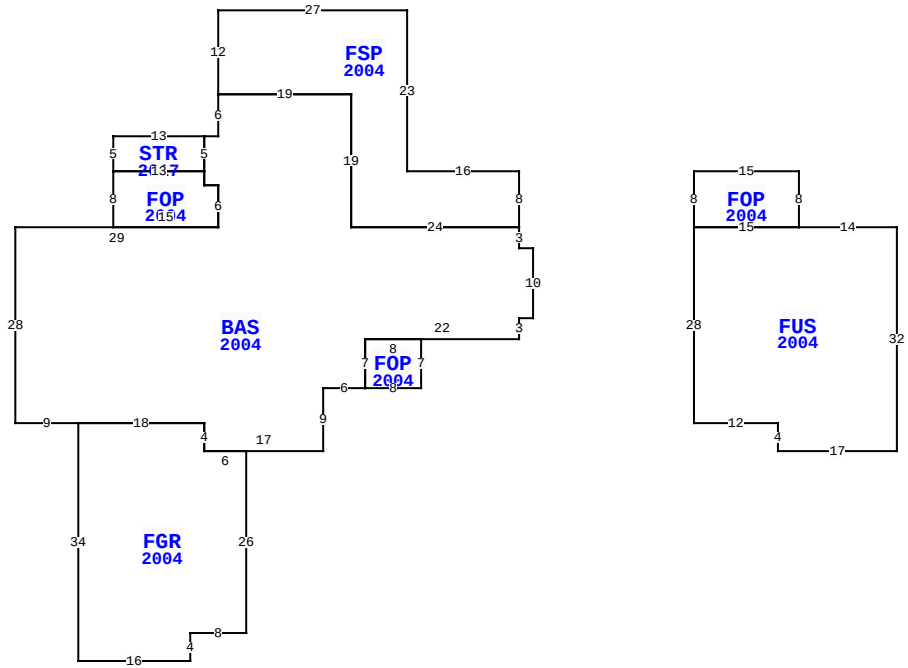


95095 SHURWALL LN, FERNANDINA BEACH

| | | | |
|---|---|---|---|
| BLD DATE | | LGL DATE | |
| XF DATE | | LAND DATE | 03/13/2024 MLU |
| INC DATE | | AG DATE | |

## NASSAU COUNTY PROPERTY — VALUATION SUMMARY

| | | |
|---|---|---|
| VALUATION BY | | STANDARD |
| Tax Group: 4 | Tax Dist: | |
| BUILDING MARKET VALUE | | 480,515 |
| TOTAL MARKET OB/XF VALUE | | 54,906 |
| TOTAL LAND VALUE - MARKET | | 1,275,000 |
| TOTAL MARKET VALUE | | 1,810,421 |
| SOH/AGL Deduction | | 1,295,097 |
| ASSESSED VALUE | | 515,324 |
| TOTAL EXEMPTION VALUE | HX HB | 50,000 |
| BASE TAXABLE VALUE | | 465,324 |
| TOTAL JUST VALUE | | 1,810,421 |
| NCON VALUE | | 0 |
| INCOME VALUE | | |
| PREVIOUS YEAR MKT VALUE | | 1,198,369 |

| PERMIT NUM | DESCRIPTION | AMT | ISSUED |
|---|---|---|---|
| B0311637 | NEW CONSTR | 0 | 01/01/2004 |
| 5347 | CHNGE SRVC | 0 | 09/12/1988 |

## SALES DATA

| OFF RECORD Number | DATE | TYPE INST | Q U | V I | RSN CD | SALE PRICE |
|---|---|---|---|---|---|---|
| 1129/1835 | 4/15/2003 | WD | U | I | 01 | 100 |
| GRANTOR: SHURLEY FLETCHER JR & | | | | | | |
| GRANTEE: WALLACE JAMES W & A | | | | | | |
| 0123/0244 | 1/01/1972 | TA | Q | I | | 8,700 |
| GRANTOR: | | | | | | |
| GRANTEE: | | | | | | |

## BUILDING NOTES

## EXTRA FEATURES

| LN | OB/XF CODE | DESCRIPTION | BLD | CAP | L | W | UNITS | UT | Adj R | ADJ UNIT PRICE | ORIG COND | YEAR ON | YEAR ACTUAL | Q | % COND | OB/XF MKT VALUE | NOTES |
|---|---|---|---|---|---|---|---|---|---|---|---|---|---|---|---|---|---|
| 1 | 0500 | FP-PRE FAB | 0 | 100 | 0 | 0 | 1.00 | UT | 3,500.00 | 3,500.00 | 100 | 2004 | 2004 | 3 | 88 | 3,080 | |
| 2 | 0300 | BOAT DCK W | 0 | 100 | 0 | 0 | 2,665.00 | SF | 40.00 | 40.00 | 100 | 2006 | 2006 | 3 | 44 | 46,904 | |
| 3 | 1242 | WD DECK A | 0 | 100 | 0 | 0 | 243.00 | SF | 10.00 | 10.00 | 100 | 2006 | 2006 | 3 | 27 | 656 | |
| 4 | 0812 | CONCRETE C | 0 | 100 | 0 | 0 | 1,226.00 | SF | 4.00 | 4.00 | 100 | 2006 | 2006 | 3 | 87 | 4,266 | |

## BUILDING DIMENSIONS

FSP=[YR=2004] W16 N23 W27 S12 BAS=[YR=2004] S6 W2 STR=[YR=2017] W13 S5 E13 N5$ S5 FOP=[YR=2004] W13 S8 E15 N6 W2 N2$ S2 E2 S6 W29 S28 E9 FGR=[YR=2004] S34 E16 N4 E8 N26 W6 N4 W18$ E18 S4 E17 N9 E6 FOP=[YR=2004] E8 N7 W8 S7$ N7 E22N3 E2 N10 W2 N3 W24 N19 W19$ E19 S19 E24 N8$ PTR=E25 FOP=[YR=2004] E15 S8 FUS=[YR=2004] E14 S32W17 N4 W12 N28 E15$ W15 N8$ W25$ .

## LAND DESCRIPTION

TOTAL OB/XF 54,906

| LN | USE CODE | CLS | LAND USE DESCRIPTION | CAP | RD | LOC ZONE | FRONT | DEPTH | TOT LND UTS | UNIT TYPE | DT | DPTH FACT | % COND | TOT ADJ | UNIT PRICE | ADJ UNIT PRICE | LAND VALUE | OTHER ADJUSTMENTS AND NOTES | YEAR | DENSITY | DECL | FRZ | YR | CONSRV |
|---|---|---|---|---|---|---|---|---|---|---|---|---|---|---|---|---|---|---|---|---|---|---|---|---|
| 1 | 000130 | C | SFR WATER | 100 | | RSF- | 1170.00 | 215.00 | 170.00 | FF | | 1.00 | 1.00 | 1.00 | 7,500.00 | 7,500.00 | 1,275,000 | | | | | | | |

REVIEW DATE 05/12/2019 BY KBA Total Acres: 0.00 Total Land Value: 1,275,000 Market: 0 Agricultural: 0 Common: 1,275,000 PRINTED 08/06/2024 BY SYS