PARCELS 28 & 28-1 &
FRACT OF LOT 1 & S-1 OF LOT 1
PAR 1 IN OR 2696/331

ALLISON FAMILY REVOCABLE TRUST/ALLISON ROBERT S TR
96034 SANDY POINTE CIR
FERNANDINA BEACH, FL 32034

2024

44-2N-28-0000-0028-0000

NASSAU COUNTY PROPERTY

BUILDING CHARACTERISTICS

ELEMENT	CD	CONSTRUCTION
Exterior Wall	12	CEDAR 100
Roof Structur	03	GABLE/HIP 100
Roof Cover	03	COMP SHNGL 100
Interior Wall	05	DRYWALL 100
Interior Floo	09	PINE WOOD 60
Interior Floo	14	CARPET 40
Air Condition	03	CENTRAL 100
Heating Type	04	AIR DUCTED 100
Bedrooms		3 100
Bathrooms		3 100
Frame	02	WOOD FRAME 100
Stories	1.	1. 100
Units		0 100
BUD8 Adjustme	04	DIST 01 100
Occupancy	00	NONE 100
Quality	03	Quality Level 03
DOR CODE	0100	SINGLE FAMILY
MAP NUM		MKT AREA 04
NEIGHBORHOOD/LOC	4009.00	

AREA TYPE	TOTAL GROSS AREA	PCT OF BASE	TOT ADJ AREA	SUBAREA MARKET VALUE
BAS	2,495	100	2,495	168,766
FGR	620	55	341	23,066
FOP	104	30	31	2,097
FSP	450	40	180	12,176
PTO	120	5	6	406
TOTALS	3,789		3,053	206,510

MARKET ADJUSTMENTS

TYPE	MDL	EFF. AREA	TOT ADJ PTS	EFF. BASE RATE	REPL. COST NEW	AYB	EYB	ECON	FNCT		NORM	% COND
0100	01	3,053	100.2800	95.27	290,859	1945	1965	0	0	0	29.00	71.00

1 SINGLE FAM – 100% - 1999 Heated Area: 2495 HX Base Yr 1999

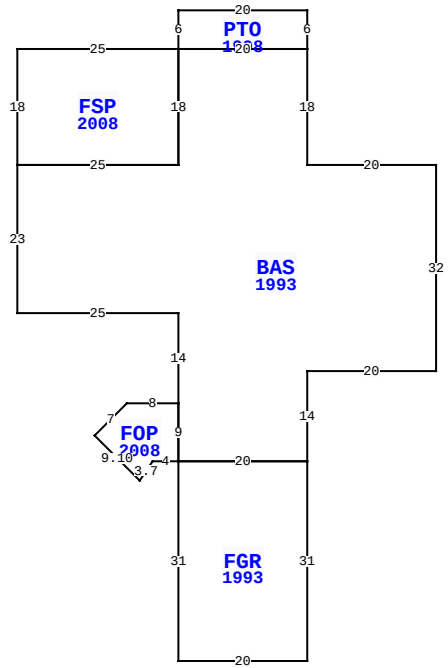

95003 NASSAU RIVER RD, FERNANDINA BEACH

BLD DATE		LGL DATE	
XF DATE		LAND DATE	03/13/2024 MLU
INC DATE		AG DATE	

NASSAU COUNTY PROPERTY VALUATION SUMMARY

VALUATION BY		STANDARD
Tax Group: 4	Tax Dist:	
BUILDING MARKET VALUE		217,903
TOTAL MARKET OB/XF VALUE		20,792
TOTAL LAND VALUE - MARKET		1,162,500
TOTAL MARKET VALUE		1,401,195
SOH/AGL Deduction		935,770
ASSESSED VALUE		465,425
TOTAL EXEMPTION VALUE	HX HB WX	55,000
BASE TAXABLE VALUE		410,425
TOTAL JUST VALUE		1,401,195
NCON VALUE		0
INCOME VALUE		
PREVIOUS YEAR MKT VALUE		958,256

PERMIT NUM	DESCRIPTION	AMT	ISSUED
P1216185	OTHER	0	10/01/2012
8349	REMODEL	54,500	08/31/1992

SALES DATA

OFF RECORD Number	DATE	TYPE INST	Q U	V I	RSN CD	SALE PRICE
2696/331	2/22/2024	WD	Q	I	05	987,000
GRANTOR: LOOP MARY A						
GRANTEE: ALLISON FAMILY REVO						
0840/0509	7/08/1998	WD	Q	I		285,000
GRANTOR: CROFT JAMES K						
GRANTEE: LOOP DAMON & MARY A						

BUILDING NOTES

BUILDING DIMENSIONS

BAS=[YR=1993] W20 N18 PTO=[YR=1998] N6 W20 S6 E20$ W20
FSP=[YR=2008] W25 S18 E25 N18$ S18 W25 S23 E25 S14
FOP=[YR=2008] W8 L5 D5 D7 R7 R2 U3 E4 N9$ S9
FGR=[YR=1993] S31 E20 N31 W20$ E20 N14 E20 N32$.

EXTRA FEATURES

L N	OB/XF CODE	DESCRIPTION	BLD	CAP	L	W	UNITS	UT	Adj R	ADJ UNIT PRICE	ORIG COND	YEAR ON	YEAR ACTUAL	Q	% COND	OB/XF MKT VALUE	NOTES
1	0300	BOAT DCK W	0	100	12	12	144.00	SF	40.00	40.00	100	2008	2008	3	52	2,995	
2	0500	FP-PRE FAB	0	100	0	0	1.00	UT	3,500.00	3,500.00	100	1945	1945	3	20	700	
3	0812	CONCRETE C	0	100	0	0	2,842.00	SF	4.00	4.00	100	1998	1998	3	75	8,526	
4	0310	AL GANG WY	0	100	0	0	20.00	LF	115.00	115.00	100	1990	1990	3	20	460	
5	0300	BOAT DCK W	0	100	0	0	165.00	SF	40.00	40.00	100	1990	1990	3	20	1,320	
6	0303	FLT DOCK W	0	100	20	10	200.00	SF	26.00	26.00	100	1990	1990	3	20	1,040	
7	0323	BOAT LFT H	0	100	0	0	1.00	UT	2,500.00	2,500.00	100	1990	1990	3	20	500	
8	0350	CARPORT WD	0	100	12	18	216.00	SF	17.55	17.55	100	2000	2000	3	20	758	
9	0317	DCK PLNG W	0	100	0	0	3.00	UT	1,000.00	1,000.00	100	2017	2017	3	78	2,340	
10	0310	AL GANG WY	0	100	0	0	24.00	LF	115.00	115.00	100	2017	2017	3	78	2,153	

LAND DESCRIPTION

TOTAL OB/XF 20,792

L N	USE CODE	CLS	LAND USE DESCRIPTION	CAP	R D	LOC ZONE	FRONT	DEPTH	TOT LND UTS	UNIT TYPE	D T	DPTH FACT	% COND	TOT ADJ	UNIT PRICE	ADJ UNIT PRICE	LAND VALUE	OTHER ADJUSTMENTS AND NOTES	YEAR	DENSITY	DECL	FRZ	YR	CONSRV
1	000130	C	SFR WATER	100		RSF-	1155.00	335.00	155.00	FF		1.00	1.00	1.00	7,500.00	7,500.00	1,162,500							

REVIEW DATE 05/12/2019 BY KBA Total Acres: 0.00 Total Land Value: 1,162,500 Market: 0 Agricultural: 0 Common: 1,162,500 PRINTED 08/06/2024 BY SYS

PARCELS 28 & 28-1 &
FRACT OF LOT 1 & S-1 OF LOT 1
PAR 1 IN OR 2696/331

ALLISON FAMILY REVOCABLE TRUST/ALLISON ROBERT S TR
96034 SANDY POINTE CIR
FERNANDINA BEACH, FL 32034

2024

44-2N-28-0000-0028-0000

NASSAU COUNTY PROPERTY

BUILDING CHARACTERISTICS

ELEMENT	CD	CONSTRUCTION
Exterior Wall	05	AVERAGE 100
Roof Structur	03	GABLE/HIP 100
Roof Cover	02	ROLL COMP 100
Interior Wall	02	WALL BD/WD 100
Interior Floo	02	MIN PLYWD 100
Air Condition	02	WINDOW 100
Heating Type	02	CONVECTION 100
Bedrooms		0 100
Bathrooms		0.5 100
Frame	02	WOOD FRAME 100
Stories	1.	1. 100
Units		0 100
Occupancy	00	NONE 100
Quality	03	Quality Level 03

DOR CODE 0100 SINGLE FAMILY
MAP NUM | MKT AREA 04
NEIGHBORHOOD/LOC 4009.00

AREA TYPE	TOTAL GROSS AREA	PCT OF BASE	TOT ADJ AREA	SUBAREA MARKET VALUE
BAS	594	100	594	8,578
UST	162	45	73	1,054
UST	270	45	122	1,762
TOTALS	1,026		789	11,393

MARKET ADJUSTMENTS

TYPE	MDL	EFF. AREA	TOT ADJ PTS	EFF. BASE RATE	REPL. COST NEW	AYB	EYB	ECON	FNCT		NORM	% COND
6500	01	789	82.5000	28.88	22,786	1994	1994	0	0	0	50.00	50.00

2 GARAGE RES – 100% - 1999 Heated Area: 594 HX Base Yr 1999

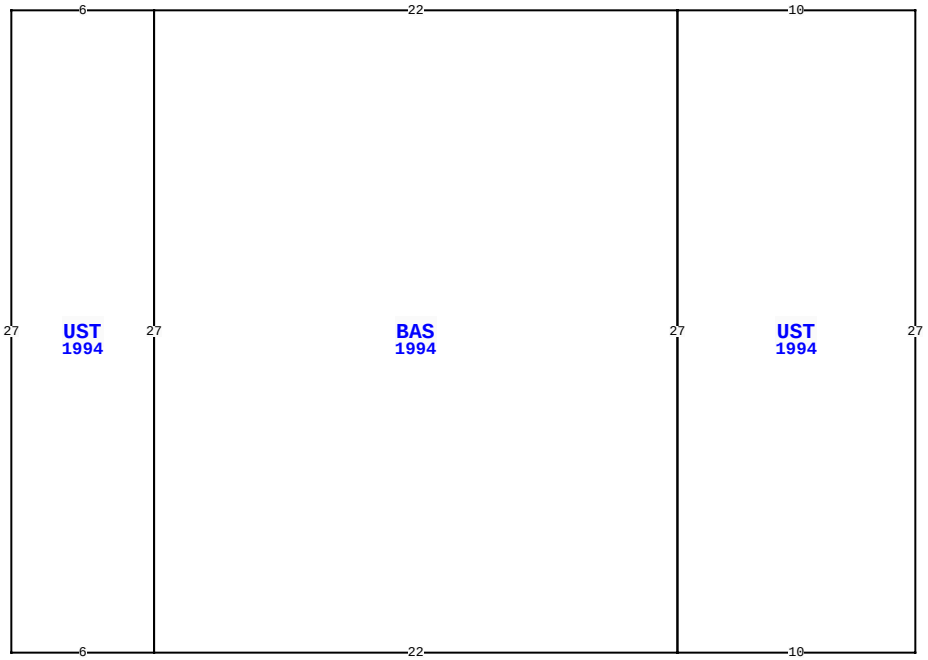

BLD DATE		LGL DATE	
XF DATE		LAND DATE	03/13/2024 MLU
INC DATE		AG DATE	

95003 NASSAU RIVER RD, FERNANDINA BEACH

VALUATION SUMMARY

VALUATION BY		STANDARD
Tax Group: 4	Tax Dist:	
BUILDING MARKET VALUE		217,903
TOTAL MARKET OB/XF VALUE		20,792
TOTAL LAND VALUE - MARKET		1,162,500
TOTAL MARKET VALUE		1,401,195
SOH/AGL Deduction		935,770
ASSESSED VALUE		465,425
TOTAL EXEMPTION VALUE	HX HB WX	55,000
BASE TAXABLE VALUE		410,425
TOTAL JUST VALUE		1,401,195
NCON VALUE		0
INCOME VALUE		
PREVIOUS YEAR MKT VALUE		958,256

PERMIT NUM	DESCRIPTION	AMT	ISSUED

SALES DATA

OFF RECORD Number	DATE	TYPE INST	Q U /	V I /	RSN CD	SALE PRICE
2696/331	2/22/2024	WD	Q	I	05	987,000
GRANTOR: LOOP MARY A						
GRANTEE: ALLISON FAMILY REVO						
0840/0509	7/08/1998	WD	Q	I		285,000
GRANTOR: CROFT JAMES K						
GRANTEE: LOOP DAMON & MARY A						

BUILDING NOTES

BUILDING DIMENSIONS

UST=[YR=1994] W10 BAS=[YR=1994] W22 UST=[YR=1994] W6 S27 E6 N27$ S27 E22 N27$ S27 E10 N27$.

EXTRA FEATURES

LN	OB/XF CODE	DESCRIPTION	BLD	CAP	L	W	UNITS	UT	Adj R	ADJ UNIT PRICE	ORIG COND	YEAR ON	YEAR ACTUAL	Q	% COND	OB/XF MKT VALUE	NOTES

LAND DESCRIPTION

TOTAL OB/XF 0

LN	USE CODE	CLS	LAND USE DESCRIPTION	CAP	RD	LOC ZONE	FRONT	DEPTH	TOT LND UTS	UNIT TYPE	DT	DPTH FACT	% COND	TOT ADJ	UNIT PRICE	ADJ UNIT PRICE	LAND VALUE	OTHER ADJUSTMENTS AND NOTES	YEAR	DENSITY	DECL	FRZ	YR	CONSRV

REVIEW DATE 05/12/2019 BY KBA Total Acres: 0.00 Total Land Value: 1,162,500 Market: 0 Agricultural: 0 Common: 1,162,500 PRINTED 08/06/2024 BY SYS