PT SAMUEL HARRISON GRANT
SEC 44-2N-28E IN OR 2688/1770

MAYES CATHERINE M & MICHAEL R
2015 LAKESIDE DRIVE
JACKSONVILLE BEACH, FL 32250

2024

44-2N-28-0000-0023-0030

NASSAU COUNTY PROPERTY

BUILDING CHARACTERISTICS

ELEMENT	CD	CONSTRUCTION
Exterior Wall	31	HARDIE BRD 100
Roof Structur	08	IRREGULAR 100
Roof Cover	03	COMP SHNGL 100
Interior Wall	05	DRYWALL 100
Interior Floo	13	LVT/LAMNT 100
Air Condition	03	CENTRAL 100
Heating Type	04	AIR DUCTED 100
Bedrooms		4 100
Bathrooms		3 100
Frame	02	WOOD FRAME 100
Stories	1.	1. 100
Quality	03	Quality Level 03
DOR CODE	0100	SINGLE FAMILY
MAP NUM		MKT AREA 04
NEIGHBORHOOD/LOC	4006.00	

AREA TYPE	TOTAL GROSS AREA	PCT OF BASE	TOT ADJ AREA	SUBAREA MARKET VALUE
BAS	2,313	100	2,313	371,792
FGR	450	55	248	39,864
FOP	160	30	48	7,716
FOP	488	30	146	23,468
FOP	608	30	182	29,255
TOTALS	4,019		2,937	472,093

MARKET ADJUSTMENTS

TYPE	MDL	EFF. AREA	TOT ADJ PTS	EFF. BASE RATE	REPL. COST NEW	AYB	EYB	ECON	FNCT		NORM	% COND
0500	01	2,937	107.1600	160.74	472,093	2023	2023	0	0	0	0.00	100.00

2 SFR CUST – 0% - 2024 Heated Area: 2313 HX Base Yr

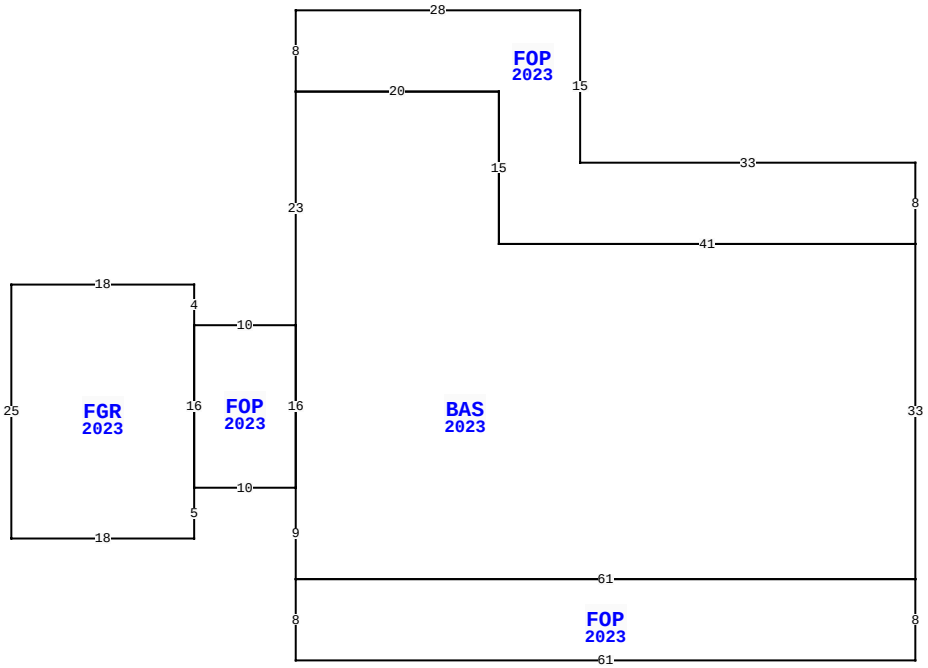

95067 RAINBOW ACRES RD, FERNANDINA BEACH

BLD DATE		LGL DATE	
XF DATE		LAND DATE	05/30/2023 MLU
INC DATE		AG DATE	

VALUATION SUMMARY

VALUATION BY	STANDARD
Tax Group: 4	Tax Dist:
BUILDING MARKET VALUE	472,093
TOTAL MARKET OB/XF VALUE	3,500
TOTAL LAND VALUE - MARKET	150,000
TOTAL MARKET VALUE	625,593
SOH/AGL Deduction	0
ASSESSED VALUE	625,593
TOTAL EXEMPTION VALUE	0
BASE TAXABLE VALUE	625,593
TOTAL JUST VALUE	625,593
NCON VALUE	475,593
INCOME VALUE	
PREVIOUS YEAR MKT VALUE	159,500

PERMIT NUM	DESCRIPTION	AMT	ISSUED
2207844	CO		04/14/2023
B2207844	NEW CONSTR	402,602	05/19/2022

SALES DATA

OFF RECORD Number	DATE	TYPE INST	Q U	V I	RSN CD	SALE PRICE
2688/1770	1/10/2024	SW	Q	I	01	714,000
GRANTOR: MSB JAX LLC						
GRANTEE: MAYES CATHERINE M &						
2543/1895	2/22/2022	WD	Q	V	01	164,900
GRANTOR: MADAFFERI MONA MARGAR						
GRANTEE: MSB JAX LLC						

BUILDING NOTES

BUILDING DIMENSIONS

BAS=[YR=2023;ORIG=100,10] W41 N15 W20 S23 S16 S9 E61 N33 $
FOP=[YR=2023;ORIG=100,2] W33 N15 W28 S8 E20 S15 E41 N8 $
FOP=[YR=2023;ORIG=39,43] E61 S8 W61 N8 $
FOP=[YR=2023;ORIG=29,18] E10 S16 W10 N16 $
FGR=[YR=2023;ORIG=11,14] E18 S4 S16 S5 W18 N25 $
.

EXTRA FEATURES

L N	OB/XF CODE	DESCRIPTION	BLD	CAP	L	W	UNITS	UT	Adj R	ADJ UNIT PRICE	ORIG COND	YEAR ON	YEAR ACTUAL	Q	% COND	OB/XF MKT VALUE	NOTES
3	0500	FP-PRE FAB	0	0	0	0	1.00	UT	3,500.00	3,500.00	100	2023	2023		100	3,500	

LAND DESCRIPTION

TOTAL OB/XF 3,500

L N	USE CODE	CLS	LAND USE DESCRIPTION	CAP	R D	LOC ZONE	FRONT	DEPTH	TOT LND UTS	UNIT TYPE	D T	DPTH FACT	% COND	TOT ADJ	UNIT PRICE	ADJ UNIT PRICE	LAND VALUE	OTHER ADJUSTMENTS AND NOTES	YEAR	DENSITY	DECL	FRZ	YR	CONSRV
1	000100	C	SFR	0	0006	OR	0.00	0.00	2.00	AC		1.00	1.00	1.00	75,000.00	75,000.00	150,000							

REVIEW DATE 07/25/2022 BY KW Total Acres: 2.00 Total Land Value: 150,000 Market: 0 Agricultural: 0 Common: 150,000 PRINTED 08/06/2024 BY SYS