LOT 3
IN OR 2058/1716
(EX UTIL ESMT IN 861/1865 &

SAI SHANKAR LLLP/
76071 SIDNEY PL
YULEE, FL 32097

2024

44-2N-27-1970-0003-0000

BUILDING CHARACTERISTICS

ELEMENT	CD	CONSTRUCTION
Exterior Wall	17	CB STUCCO 70
Exterior Wall	15	CONC BLOCK 30
Roof Structur	04	WOOD TRUSS 100
Roof Cover	03	COMP SHNGL 100
Interior Wall	05	DRYWALL 100
Interior Floo	14	CARPET 70
Interior Floo	15	HARDTILE 30
Ceiling	02	F.NOT SUS 100
Air Condition	03	CENTRAL 100
Heating Type	04	AIR DUCTED 100
Fixtures		261 100
Frame	03	MASONRY 100
Story Height		10 100
RMS		73 100
Units		0 100
Occupancy	00	NONE 100
Quality	03	Quality Level 03
DOR CODE	3900	HOTELS AND MOTELS
MAP NUM		MKT AREA 04
NEIGHBORHOOD/LOC	4001.00	

AREA TYPE	TOTAL GROSS AREA	PCT OF BASE	TOT ADJ AREA	SUBAREA MARKET VALUE
BAS	13,346	100	13,346	1,607,467
BAS	56	100	56	6,745
BAS	63	100	63	7,588
BAS	64	100	64	7,709
BAS	70	100	70	8,431
BAS	83	100	83	9,997
BAS	110	100	110	13,249
BAS	162	100	162	19,512
BAS	162	100	162	19,512
CAN	15	30	4	481
TOTALS	43,096		42,161	5,078,107

MARKET ADJUSTMENTS

TYPE	MDL	EFF. AREA	TOT ADJ PTS	EFF. BASE RATE	REPL. COST NEW	AYB	EYB	ECON	FNCT		NORM	% COND
3904	07	42,161	94.5535	136.87	5,770,576	2007	2007	0	0	0	12.00	88.00

1 LMTD HOTEL – 0% - 0 Heated Area: 41762 HX Base Yr

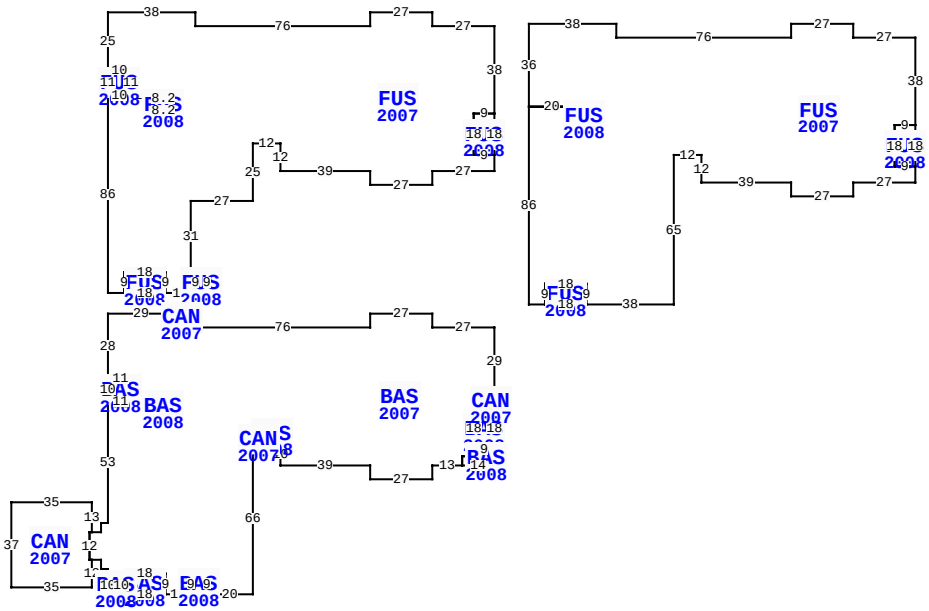

** This building has 23 Sub-Areas

76071 SIDNEY PL, YULEE

BLD DATE		LGL DATE	
XF DATE		LAND DATE	09/02/2020 KK
INC DATE		AG DATE	

NASSAU COUNTY PROPERTY

PAGE 1 of 2 4

VALUATION SUMMARY

VALUATION BY	DIRECT_CAP
Tax Group: 4	Tax Dist:
BUILDING MARKET VALUE	5,126,530
TOTAL MARKET OB/XF VALUE	0
TOTAL LAND VALUE - MARKET	0
TOTAL MARKET VALUE	5,760,146
SOH/AGL Deduction	1,396,255
ASSESSED VALUE	4,363,891
TOTAL EXEMPTION VALUE	0
BASE TAXABLE VALUE	4,363,891
TOTAL JUST VALUE	5,760,146
NCON VALUE	0
INCOME VALUE	5,760,146
PREVIOUS YEAR MKT VALUE	5,760,146

HOLIDAY INN EXPRESS & SUITES

PERMIT NUM	DESCRIPTION	AMT	ISSUED
R241137	TEAR OFF ROOF- RE	159,000	01/30/2024
E22106	ELEC OTHER	0	09/01/2009
E19492	ELEC OTHER	3,500	06/01/2007
E19493	ELEC OTHER	400	06/01/2007
E19494	ELEC OTHER	2,100	06/01/2007
B19828	SWIM POOL	47,000	05/01/2007

SALES DATA

OFF RECORD Number	DATE	TYPE INST	Q / U	V / I	RSN CD	SALE PRICE
2058/1716	7/15/2016	WD	U	I	11	100
GRANTOR: PATEL RAMAN & KANCHAN						
GRANTEE: SAI SHANKAR LLLP						
1908/0462	3/19/2014	QC	U	I	11	100
GRANTOR: PATEL KANCHAN R						
GRANTEE: SAI SHANKAR LLLP						

BUILDING NOTES

EXTRA FEATURES

LN	OB/XF CODE	DESCRIPTION	BLD	CAP	L	W	UNITS	UT	Adj R	ADJ UNIT PRICE	ORIG COND	YEAR ON	YEAR ACTUAL	Q	% COND	OB/XF MKT VALUE	NOTES
1	0803	ASPHALT C	0	0	0	0	33,182.00	SF	2.00	2.00	100	2007	2007	3	60	39,818	
2	0400	CONC CURB	0	0	0	0	1,869.00	LF	15.00	15.00	100	2007	2007	3	91	25,512	
3	0402	CONC BUMPE	0	0	0	0	26.00	UT	25.00	25.00	100	2007	2007	3	91	592	
4	0812	CONCRETE C	0	0	0	0	4,539.00	SF	4.00	4.00	100	2007	2007	3	88	15,977	
5	0505	FLAGPOLE A	0	0	0	0	50.00	LF	50.00	50.00	100	2007	2007	3	31	775	
6	0963	FIRE HYDR	0	0	0	0	2.00	UT	1,500.00	1,500.00	100	2007	2007	3	100	3,000	
7	0811	CONCRETE B	0	0	0	0	636.00	SF	5.20	5.20	100	2007	2007	3	88	2,910	
8	1123	CB 8"	0	0	44	0	396.00	SF	6.15	6.15	100	2007	2007	3	88	2,143	
9	4950	BOLLARD	0	0	0	0	7.00	UT	100.00	100.00	100	2007	2007	3	100	700	
10	0463	FENCE GATE	0	0	0	6	2.00	UT	1,200.00	1,200.00	100	2007	2007	3	72	1,728	

TOTAL OB/XF 93,155

BUILDING DIMENSIONS

FUS=[YR=2007;ORIG=183,-63] N7 W9 N18 E9 N38 W27 N6 W27 S6 W76 N6 W38 S36 E20 E8 S8 W8 N8 W20 S86 E7 N9 E18 S9 E38 N65 E12 S12 E39 S6 E27 N6 E27 $
BAS=[YR=2007;ORIG=0,0] W27 N6 W27 S6 W76 N6 W3 S3 W6 N3 W29 S28 E11 S8 E9 E8 S8 W8 N8 W9 S2 W11 S53 W3 S4 W4 W1 S12 E1 E4 S4 E3 S2 E7 E18 S9 E11 N9 E7 S9 E20 N66 N3 E5 N5 E7 S8 S10 E39 S6 E27 N6 E13 N4 E5 N3 N18 E6 N6 E3 N29 $
FUS=[YR=2007;ORIG=0,-68] N7 W9 N18 E9 N38 W27 N6 W27 S6 W76 N6 W38 S25 E10 S11 E10 E8 S8 W8 N8 W10 W10 S86 E7 N9 E18 S9 E13 N9 W2 N31 E27 N25 E12 S12 E39 S6 E27 N6 E27 $
CAN=[YR=2007;ORIG=-175,89] N13 W35 S37 E35 N12 W1 N12 E1 $
BAS=[YR=2008;ORIG=-161,116] E18 N9 W18 S9 $

LAND DESCRIPTION

LN	USE CODE	CLS	LAND USE DESCRIPTION	CAP	RD	LOC ZONE	FRONT	DEPTH	TOT LND UTS	UNIT TYPE	DT	DPTH FACT	% COND	TOT ADJ	UNIT PRICE	ADJ UNIT PRICE	LAND VALUE	OTHER ADJUSTMENTS AND NOTES	YEAR	DENSITY	DECL	FRZ	YR	CONSRV
1	003900	C	MOTEL	0	0003	CHT	0.00	0.00	84,157.00	SF		1.00	1.00	1.00	8.00	8.00	673,256							

REVIEW DATE 09/02/2020 BY KK Total Acres: 0.00 Total Land Value: 633,616 Market: 0 Agricultural: 0 Common: 0 PRINTED 08/06/2024 BY SYS

LOT 3
IN OR 2058/1716
(EX UTIL ESMT IN 861/1865 &

SAI SHANKAR LLLP/
76071 SIDNEY PL
YULEE, FL 32097

2024

44-2N-27-1970-0003-0000

NASSAU COUNTY PROPERTY

BUILDING CHARACTERISTICS

ELEMENT	CD	CONSTRUCTION

DOR CODE	3900	HOTELS AND MOTELS	
MAP NUM		MKT AREA	04
NEIGHBORHOOD/LOC	4001.00		

AREA TYPE	TOTAL GROSS AREA	PCT OF BASE	TOT ADJ AREA	SUBAREA MARKET VALUE
TOTALS				

MARKET ADJUSTMENTS

TYPE	MDL	EFF. AREA	TOT ADJ PTS	EFF. BASE RATE	REPL. COST NEW	AYB	EYB	ECON	FNCT		NORM	% COND

VALUATION SUMMARY

VALUATION BY	DIRECT_CAP
Tax Group: 4	Tax Dist:
BUILDING MARKET VALUE	5,126,530
TOTAL MARKET OB/XF VALUE	0
TOTAL LAND VALUE - MARKET	0
TOTAL MARKET VALUE	5,760,146
SOH/AGL Deduction	1,396,255
ASSESSED VALUE	4,363,891
TOTAL EXEMPTION VALUE	0
BASE TAXABLE VALUE	4,363,891
TOTAL JUST VALUE	5,760,146
NCON VALUE	0
INCOME VALUE	5,760,146
PREVIOUS YEAR MKT VALUE	5,760,146

PERMIT NUM	DESCRIPTION	AMT	ISSUED
M12699	MECH OTHER	0	02/01/2007
B18726	NEW CONSTR	0	12/01/2006
C18726	CO ISSUED	0	12/01/2006
P11810	OTHER	0	12/01/2006
R09824	REPAIR/RRF	50,000	10/01/2006
E18119	ELEC OTHER	0	09/01/2006

SALES DATA

OFF RECORD Number	DATE	TYPE INST	Q U /	V I /	RSN CD	SALE PRICE
2058/1716	7/15/2016	WD	U	I	11	100
GRANTOR: PATEL RAMAN & KANCHAN						
GRANTEE: SAI SHANKAR LLLP						
1908/0462	3/19/2014	QC	U	I	11	100
GRANTOR: PATEL KANCHAN R						
GRANTEE: SAI SHANKAR LLLP						

BLD DATE		LGL DATE	
XF DATE		LAND DATE	09/02/2020 KK
INC DATE		AG DATE	

BUILDING NOTES

BUILDING DIMENSIONS

EXTRA FEATURES

LN	OB/XF CODE	DESCRIPTION	BLD	CAP	L	W	UNITS	UT	Adj R	ADJ UNIT PRICE	ORIG COND	YEAR ON	YEAR ACTUAL	Q	% COND	OB/XF MKT VALUE	NOTES
11	0972	ST LGHT UN	0	0	0	0	12.00	UT	2,530.00	2,530.00	100	2007	2007	3	72	21,859	
12	0648	LIGHTS-AV	0	0	0	0	2.00	UT	140.00	140.00	100	2007	2007	3	31	87	
13	0861	POOL GUNIT	0	0	0	0	668.00	SF	85.00	85.00	100	2007	2007	3	48	27,254	
14	0855	CONC PAVER	0	0	0	0	1,616.00	SF	10.00	10.00	100	2007	2007	3	88	14,221	
15	0462	ST/AL FNC	0	0	206	0	1,030.00	SF	10.00	10.00	100	2007	2007	3	48	4,944	
16	0649	LIGHTS-GD	0	0	0	0	14.00	SF	225.00	225.00	100	2007	2007	3	31	977	
17	0966	FIRE SPRNK	0	0	0	0	42,129.00	SF	3.00	3.00	100	2007	2007	3	88	111,221	

LAND DESCRIPTION

TOTAL OB/XF 180,563

LN	USE CODE	CLS	LAND USE DESCRIPTION	CAP	RD	LOC ZONE	FRONT	DEPTH	TOT LND UTS	UNIT TYPE	DT	DPTH FACT	% COND	TOT ADJ	UNIT PRICE	ADJ UNIT PRICE	LAND VALUE	OTHER ADJUSTMENTS AND NOTES	YEAR	DENSITY	DECL	FRZ	YR	CONSRV

REVIEW DATE 09/02/2020 BY KK Total Acres: 0.00 Total Land Value: 633,616 Market: 0 Agricultural: 0 Common: 0 PRINTED 08/06/2024 BY SYS